Koch

CABINETS

MIDLAND SERIES

Koch Midland

Midland Series Page Revisions

PAGE #	CHANGE IMPLEMENTED
3	Added Rustic Maple and Fawn
4	Added Rustic Maple upcharge
4	Adjusted upcharge for plywood (Heartland & Hybrid)
5	Updated contact information
9	Added Rustic Maple wood species description
20-26	Added Rustic Maple; not all door styles are available
20-26	Added new stain, Fawn; available on Maple and Rustic Maple
37	Added note to Wall Easy Reach 'No Modifications'
38	Added note about Rustic Maple to Omega Range Hood; it will be clear Maple
48	Added note to Base Easy Reach 'No Modifications'
50	Added note to Diagonal Sink Front; does not include floor
51	Adjusted line drawings for Vanity Sinks w/ Side Drawers
53	Added 27" & 30" wide Vanity Bases w/ FHD
57	Added note to Toilet Topper; includes two shelves
62	Added note to Tall Oven Cabinets; extended stiles N/A
63	Added 36" wide pantry cabinets
64	Added 36" wide pantry cabinets w/ 3 rollouts
67	Added note that the Tall Walk Through Pantry Front DOES NOT come with a box
69	Added note to end panels; 'clear species may be used when ordering rustic species for cabinets'
70	Added note to skins and back panel; 'clear species may be used when ordering rustic species for cabinets'
70	Removed 3/8" Back Panels and added 1/2" Back Panels
71	Added note to custom width reduction modification 'BER & WER cabinets cannot be modified'
72	Added False Front modification
76	Added Finished ADA Toe Kick
77	Added note 'Drawer Box/Track Selection Upcharges Will Apply' to Loose Rollout
78	Added dimensions of the corbel
78	Added Loose Standard Drawer box with 7/8 Ext Undermount Guides
79	Removed CAB MATERIAL-3/8 and added CAB MATERIAL-1/2
80	Added Loose Door NR
81	Added Loose BER Hinges
81	Added Loose Blum Release Clips
85	Added Pioneer, Rustic Maple, Cashew to Starter Door Kit and adjusted pricing
86	Added Maple, Fawn to Sample Block Set and adjusted pricing; includes drawer box to hold blocks

MIDLAND SERIES - PRINTED END OPTIONS

STAIN	Maple
Cashew	Yes
Espresso	Yes
Fawn	No
Natural	No
Nutmeg	Yes
Pebble	Yes
Saddle	Yes

STAIN	Rustic Maple
Cashew	Yes
Fawn	No
Nutmeg	Yes

PAINT	PAINT GRADE - HD
Arctic	Yes
Dusk	Yes
Evergreen Fog	No
Graphite	No
Naval	No
Oyster	Yes
Shoji White	Yes
Slate Blue	No
Taupe	Yes

PLEASE NOTE:
IF NO PRINTED END IS AVAILABLE, FINISHED END SKINS MUST BE USED FOR EXPOSED CABINET SIDES. CLEAR SPECIES MAY BE USED WHEN ORDERING RUSTIC SPECIES FOR CABINETS.

FOR HEARTLAND END OPTIONS, REFER TO PAGE 11.
FOR HYBRID END OPTIONS, REFER TO PAGE 12.

Koch Midland

UP-CHARGE LIST

111 N. 1 ST
SENECA, KS 66538
TOLL FREE PHONE: 877-540-5624

SHIPPING PHONE: 866-739-5624
shipping@kochcabinet.com

September 2026

See Door Specification Sheet for Availability on all Options

Wood Specie Upcharge

RUSTIC MAPLE	5%
Full Overlay	5%

PRINTED ENDS

Please review the table on Page 3 or Midland End Options on Page 10,
Heartland End Options on Page 11 and Hybrid End Options on Page 12.

Please note: If no printed end is available, finished end skins must be used for exposed cabinet sides.

AVAILABLE UPGRADES

SERIES UPCHARGE

HEARTLAND	27%	(PLYWOOD SERIES)
*HYBRID	20%	(SEE BELOW)

*Wall Cabinets: Sides will be plywood
*Base & Vanity Cabinets: Sides, Floor and Toekick will be plywood
*Pantry Cabinets: Bottom Floor, Sides and Toekick will be plywood
*3/4" particle board (adjustable) shelving with a maple print on both sides and one long edge.

Drawer Track/Rollout Upgrade Charge

BLUM 7/8 EXT. UNDERMOUNT SOFT CLOSE TRACK (BLUMSC-7/8) — $78 List Price per Drawer

Drawer Upgrade Charge

5/8" SOLID HARDWOOD DOVETAIL DRAWER BOX WITH BLUM 7/8 EXTENSION UNDERMOUNT SOFT CLOSE TRACK (HWDT-7/8) — $122 List Price per Drawer

5 PIECE FRONTS

5 PIECE DRAWER FRONT — $55 EA

Softclose Upgrade

UPGRADE TO SOFT CLOSE HINGE — $20 List Price per Door

RUSH POLICY

Rush orders will have a $40 per box charge. There is a limit of 3 cabinets per rush order.
When you check the rush box on your cover sheet this charge will show up in your confirmation.
Any order over three boxes will not be considered for our rush program.
For more information refer to page 8.

Koch Midland

CONTACTS

Office Hours 7:30 - 4:30 Mon - Fri www.kochcabinet.com

CUSTOMER SERVICE OFFICE

TOLL FREE - PH: 877-540-5624 **FAX: 785-336-2348**
orders@kochcabinet.com

KELSEY BURDIEK - EXT. 2170
Customer Service Manager, Price Book
kelsey@kochcabinet.com

JUSTIN PERRY - EXT. 2980
Customer Service - Assistant Manager, Programming
Technical Questions
jperry@kochandco.com

NATALIE DETERS - EXT. 2120
Customer Service, Order Entry
natalie@kochcabinet.com

MADISON HOLTHAUS - EXT. 2790
Customer Service, Order Entry
madison@kochcabinet.com

MAXINE GLYNN - EXT. 2030
Customer Service, Receptionist, Order Entry
maxine@kochcabinet.com

VICE PRESIDENT OF SALES

AMY BURGESS - EXT. 2430 **PH: 785-369-3036**
Training Sessions
amyb@kochcabinet.com

ONLINE ORDERING - PH: 877-540-5624

ELI STRAHM - 785-336-0180
CabConnect Training, CabConnect Support & Information,
Order Express Training, Order Express Support & Information
eli@kochcabinet.com

ERIC SCHMITZ - 785-369-3094
IT Administrator
eric@kochandco.com

2020 DESIGN & MEDIA - PH: 785-369-3093

kochmarketing@kochandco.com

ANNE ALDERFER - EXT. 3500
Price Book, 2020, Digital & Brochure Media, Website
anne@kochcabinet.com

DANA REINECKE - EXT. 3555
Digital & Brochure Media, Website
dana@kochcabinet.com

PLANT MANAGEMENT - PH: 877-540-5624

DARREN HOLTHAUS - KS PLANT MANAGER
785-369-3077
Product Information, Quality Issues
darren@kochcabinet.com

DEAN CHURCHILL - BARNWELL, SC PLANT MANAGER
803-868-6880
Product Information, Quality Issues
dean@kochcabinet.com

BARRY KOCH - PRODUCTION MANAGER
No extension - use E-mail barry@kochcabinet.com

COMPANY MANAGEMENT - PH: 877-540-5624

JIM KOCH
President
No extension - use E-mail jimk@kochandco.com

CRAIG HEIMAN - 785-336-0160
General Manager
craig@kochcabinet.com

LARRY KUCKELMAN - Ext. 1330
C.F.O., Accounts Receivable
larry@kochandco.com

PRODUCTION SCHEDULING - CUSTOMER SERVICE

LAURIE OSTERHAUS - 785-369-3063
Production Scheduling
laurieo@kochandco.com

SHIPPING DEPT - PH: 866-739-5624 FAX: 785-336-6045

RICHARD ENGELKEN - SHIPPING MGR - EXT. 2810
Delivery Schedule, Trucking Damage,
Freight Cost and Quotes
richarde@kochcabinet.com

CLAIRE FOWLER - SHIPPING ASSISTANT - EXT. 2640
Delivery Schedule, Misc. Parts, Ship Log, Return Items,
Missing Items, Backorder Schedule, Damages, Return Items
claire@kochandco.com

SOUTH CAROLINA - BRANDI HANDBERRY 803-868-6877
Delivery Schedule, Trucking Damage
brandi@kochcabinet.com

RECEIVABLE ACCT - PH: 877-540-5624 FAX:785-336-2638

ANGIE LUEGER - 785-369-3013
Credit, Payments
angie@kochandco.com

BONNIE RIDENOUR - 785-369-3016
Cabinet Invoicing
bonnier@kochandco.com

AFTER SALES SERVICE/WARRANTIES - PH: 877-540-5624

CARA BAKER - EXT. 2830
Warranty Claims Manager
cara@kochcabinet.com

MIKE WHITLEY - (689) 345-5908
After Sales Service/Warranty Assistance
mikew@kochcabinet.com

NOTES OR ADDITIONS

Koch Midland

KOCH CABINETS, A DIVISION OF KOCH AND CO., INC., CABINET WARRANTY

LIMITED 5 YEAR WARRANTY

Koch & Co., Inc. warrants to the original consumer purchaser that the cabinet box, shelves, and drawer box will be free from defects in materials and workmanship, under normal use, for five years. This warranty is not transferable. No representative of Koch and Co., Inc. has the authority to modify this warranty.

Warranty Limitations

This limited 5 year warranty does not apply to:

1. Cabinetry installed outdoors.
2. Cabinets that have been improperly installed, cleaned, or maintained.
3. Cabinets not installed in the United States.
4. Defects caused by misuse, abuse, negligence, alterations, environmental conditions, improper installation, normal wear and tear, commercial use, or improper storage and handling.
5. Labor for replacement or removal of cabinets.
6. Midland cabinets should not be mixed with Classic, Imperial, or Express cabinets in a project. Doing so will void any warranty on color issues.
7. Against expansion or contraction occurring as a result of humidity levels being too high or too low. We recommend 35% to 45% relative humidity levels in your home. This warranty will be void if cabinets are stored or installed in environments that do not have properly controlled humidity levels.
8. Damage claims on cabinets stored for longer than 90 days are subject to review by Koch management due to environmental exposure and additional handling issues. Some conditions could void this warranty.
9. Warp: Koch & Co., Inc. has an allowance of 3/16" on any door or drawer front under 24" wide X 45" tall. Any cabinet whose warpage exceeds 3/16" and can not be corrected by hinge adjustment will be replaced by Koch & Co., Inc. after it has been acclimated for 1 year. If doors are removed during installation pay close attention that they are reinstalled on the same cabinet.
10. Finish issues on unfinished cabinets.
11. Unfinished cabinets that are not finished within two weeks of delivery date.

Warranty Disclaimers

1. Wood characteristics that are inherently associated with a wood species. Each wood specie exhibits its own distinctive pattern and characteristics which adds to its natural beauty.

2. Color variations. This warranty does not cover the natural aging and darkening of the wood color, nor does it apply to the inherent growth characteristics of the wood. As with other natural materials, wood is affected by environmental factors such as natural and artificial lighting. Darkening or mellowing of the wood can be expected and is a natural process of wood.

3. From time to time, we will change design, specifications, and materials, as conditions require and improvements are developed, but we have no obligation to incorporate such changes in products we previously manufactured.

Warranty Performance

Koch & Co., Inc. may elect to repair or replace any Koch Cabinet product covered by our warranty. Should defects in material or workmanship exist during this warranty, Koch & Co., Inc. will elect at its discretion to either repair or replace the defective material or component, excluding labor costs. This warranty covers only parts and materials supplied by Koch & Co., Inc., and does not cover costs for removal or installation of counter tops, plumbing fixtures, appliances or related materials, or labor costs. Natural and environmental factors will affect cabinet products over time: therefore, Koch & Co., Inc. cannot be responsible for replacement products that may not exactly color-match installed product.

Some states do not allow exclusions or limitations of incidental or consequential damages, so the above limitations or exclusions may not apply. This warranty gives you specific legal rights, and you may also have other rights.

The Midland Series is designed to be an entry level/stock cabinet line and may have slight imperfections that will be visible. This is an acceptable characteristic of this economical line and will not be a reason for replacement.

This warranty is in lieu of all other warranties expressed or implied.

Koch Midland

KOCH POLICY AND PROCEDURES

ORDERS: Please send orders via Order Express. Orders are assigned a work order number the same day they are received. Orders received after 2:00 pm will be logged in the next business day. We do not accept orders over the phone. 2:00 p.m. central time is the cut off time for order entry.

ONCE YOUR ORDER IS PLACED, THERE CAN BE NO CHANGES.
CONFIRMATION WILL BE SENT WITHIN 24 HOURS AND THE ORDER IS RELEASED TO OUR PRODUCTION TEAM.

PROJECT LEAD TIMES: Project lead times are 6 weeks. Projects of over 200 cabinets that need different size cabinets than what are offered in spec book will be considered. Contact Amy for pricing (amyb@kochcabinet.com).

SHIP LOG: A ship log will be e-mailed to you on a weekly basis. This log will give you an estimated ship date on cabinet orders that we have received.

SHIPPING: Any questions about shipping, truck schedules, requirements, etc. need to be directed to the shipping department. Call them at 866-739-5624 or by email at shipping@kochcabinet.com

ALL JOB SITE DELIVERIES MUST BE PRE-APPROVED, IN WRITING, BY SHIPPING DEPARTMENT.
KOCH AND COMPANY REQUIRES DEALERS TO HAVE A WAREHOUSE OR A DELIVERY SERVICE THAT WE CAN DELIVER TO.

KOCH & COMPANY WILL NOT DELIVER TO ANY LOCATION THAT DOES NOT HAVE A DEALER (OR AN AUTHORIZED REPRESENTATIVE OF THE DEALER) TO INSPECT AND SIGN FOR THE CABINETS.

DEALER LOCATION DELIVERY IS A SERVICE THAT REQUIRES DEALERS TO BE RESPONSIBLE FOR THE FOLLOWING:
1. DEALER IS TO PROVIDE THE ASSISTANCE OF AT LEAST TWO PEOPLE TO UNLOAD THE TRUCK.
2. A REPRESENTITIVE OF THE DEALER MUST INSPECT THE CABINETS AS THEY ARE UNLOADED AND SIGN THE PACKING SLIP. ANY DAMAGE OR MISSING ITEMS MUST BE NOTED ON THE PACKING SLIP.
3. MAKING SURE THE DETAILED MAP SENT HAS A ROUTE THAT IS ACCESSABLE FOR THE TRUCK. THIS INCLUDES MAKING SURE OF BRIDGE CLEARANCE, WEIGHT RESTRICTIONS FOR BRIDGES OR ROADS, AND THAT THERE IS NOT ROAD CONSTRUCTION THAT WILL HINDER THE DELIVERY OF CABINETS.

IF ANY CONDITION, AT THE DISCRETION OF THE DRIVER, IS UNSAFE AND THE CABINETS CAN NOT BE DELIVERED, THEY WILL BE RETURNED TO THE FACTORY. DOUBLE FREIGHT CHARGES WILL BE APPLIED AND THE SCHEDULED RE-SHIP DATE WILL BE BASED ON THE TRUCK SPACE AVAILABLE.

THERE WILL BE A MINIMUM $200 RE-ROUTING CHARGE FOR ALL ORDERS WHICH HAVE THIER DESTINATION CHANGED BY THE DEALER AFTER THE TRUCK IS LOADED OR IN TRANSIT.

THERE WILL BE A MINIMUM CHARGE OF $200 IF THE TRUCK HAS TO SIT FOR MORE THAN AN HOUR PAST THE SCHEDULED DELIVERY TIME WITHOUT SOMEONE STARTING TO UNLOAD IT.

RUSH POLICY: Rush orders will have a $40 per box charge. There is a limit of 3 cabinets per rush order. When you check the rush box on your cover sheet this charge will show up in your confirmation. Any order over three boxes will not be considered for our rush program.

Rush orders will be ready to ship in approximately 10 working days and will be shipped on the first available truck. Shipping date will depend on your truck schedule. If you decide to ship FED-EX or LTL those charges will apply. These charges can vary in price but will exceed $125 depending on location of delivery.

No changes are allowed on rush orders after they have been confirmed. Work is started on the order as soon as it has been confirmed so that we can deliver it to you on time. Once the work has started it can not be stopped.

SEVEN STAIN CHOICES: Cashew, Espresso, Fawn, Natural, Nutmeg, Pebble, and Saddle

NINE PAINT CHOICES: Arctic, Dusk, Evergreen Fog, Graphite, Naval, Oyster, Shoji White, Slate Blue and Taupe

PRINTED ENDS: Please review the table on Page 3 or review Midland End Options on Page 10, Heartland End Options on Page 11 and Hybrid End Options on Page 12.

OVERLAYS: Available in Standard and Modified Full Overlay.

KOCH POLICY AND PROCEDURES

MAPLE WOOD SPECIES

Maple is a smooth, even grained wood that may contain: narrow staves, sapwood, heartwood, and all other natural characteristics commonly found within this species.

RUSTIC MAPLE WOOD SPECIES

Maple is a smooth, even grained wood that may contain: narrow staves, sapwood, heartwood, and all other natural characteristics commonly found in wood. Rustic Maple has more color variation, burls and knots than standard Maple to give cabinets more character.

PAINT GRADE - HD

Our Paint Grade is HDF, a high density fiberboard which is a composite material that is made from recycled wood fibers and resin. HDF is machine dried and pressed to produce dense sheets of material that stands up well to changes in heat and humidity. HDF is a smooth, even product that is specifically intended for a painted finish.

FINISHES

Cabinets receive a coat of non wiping stain, one coat of self sealing conversion varnish, and a top coat of conversion varnish.

PAINTS

On wood products movement is typical due to changes in the climate conditions. This will cause the hairline cracks at the stiles, rails, and joints that you will see in a painted finish. Panel shrinkage may also occur in the door panel of your cabinetry. Over time there may be a slight color change in this finish due to exposure to natural and artificial light. These items listed above are natural occurrences in the wood and will not be considered a defect or reason for replacement by Koch Cabinets.

FINISHING PROCESS

1. Doors and drawer fronts are sanded through a wide belt sander followed by an orbital sander.
2. They are hand sanded and inspected.
3. Stain is applied to both sides.
4. Doors and fronts have a coat of self sealing conversion varnish applied and are oven cured one side at a time.
5. They are hand seal sanded and brushed clean of sealer dust.
6. They have a top coat of conversion varnish applied and are oven cured one side at a time.

STACKED CABINETS

When stacking two cabinets together, we want you to be aware they may not be exactly the same width, and that the two rails that join them together might not be a perfect fit. When working with wood products, you can expect variances.

If two separate cabinets are used for a 'stacking' setup and if there are an issues with the fit, it will not be considered a defect and will not be reason for replacement.

Koch Midland

CABINET SPECIFICATIONS FOR MIDLAND

BASE CABINET

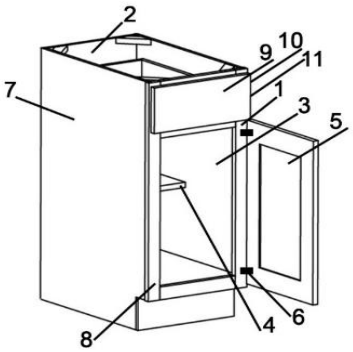

WALL CABINET

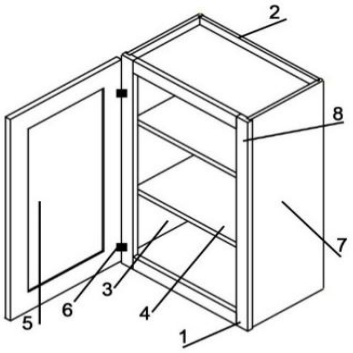

MIDLAND SERIES

1. 3/4" x 1 1/2" HARDWOOD FACE FRAMES WITH GLUED AND POCKET SCREWED JOINTS.

2. 3/8" PARTICLE BOARD BACKS, TOPS AND BOTTOMS, WITH MAPLE PRINT INTERIOR.

3. 1/2" PARTICLE BOARD SIDES, WITH MAPLE PRINT INTERIOR.

4. 3/4" PARTICLE BOARD SHELVING WITH A MAPLE PRINT ON BOTH SIDES AND ONE EDGE.
   ALL SHELVES ARE ADJUSTABLE WITH BASE CABINETS HAVING 1/2 DEPTH SHELVES,
   SUPPORTED BY SHELF CLIPS.

5. DOOR STYLE
   PLEASE REFER TO THE DOOR STYLE PAGES 19-26 FOR ADDITIONAL INFORMATION.

6. ONE PIECE ADJUSTABLE HINGE.
   DOOR UPGRADE OPTION:
   1. ADJUSTABLE SOFT CLOSE HINGE

7. CABINET ENDS:
   1. ENDS WILL BE CLOSELY MATCHING PRINT TO THE SELECTED FINISH COLOR.
      CLOSELY MATCHING PRINT IS NOT AVAILABLE WITH EVERGREEN FOG, GRAPHITE, NAVAL AND SLATE BLUE.
   2. OPTIONAL ATTACHED FINISHED END SKINS MAY BE ADDED TO THE CABINET.

8. STANDARD FINISH CONSISTS OF NON WIPING STAIN, A COAT OF SELF SEALING CONVERSION VARNISH & A
   TOP COAT OF CONVERSION VARNISH. FINISH THICKNESS APPROXIMATELY 7 MIL. WET.

9. 3/4" HARDWOOD DRAWER FRONTS, PAINTED MAPLE WILL BE 3/4" HDF FRONTS.

10. SELF ADJUSTING EPOXY COATED 3/4 EXTENSION SIDE MOUNT DRAWER GUIDES.
    TRACK UPGRADE OPTION:
    1. UPGRADE TO A BLUM 7/8 EXTENSION UNDERMOUNT SOFT CLOSE TRACK
       (DOES NOT INCLUDE 5/8" SOLID HARDWOOD DOVETAIL DRAWER BOX)

11. DRAWER BOX - 1/2" RABBETED PLYWOOD DRAWER WITH 1/4" FLOOR, AND 3/4 EXTENSION SIDE MOUNT.
    DRAWER UPGRADE OPTION:
    1. 5/8" SOLID HARDWOOD DOVETAIL DRAWER BOX WITH BLUM 7/8 EXTENSION UNDERMOUNT SOFT CLOSE
       TRACK

KCMA CERTIFIED
MEETS KCMA ESP STANDARD
C.A.R.B. PHASE II COMPLIANT

Koch Midland

CABINET SPECIFICATIONS FOR HEARTLAND

BASE CABINET

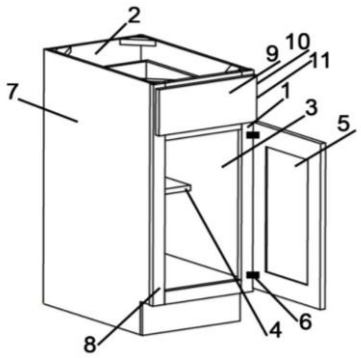

WALL CABINET

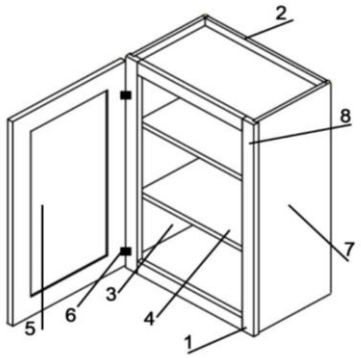

THE HEARTLAND PLYWOOD SERIES

1. 3/4" x 1 1/2" HARDWOOD FACE FRAMES WITH GLUED AND POCKET SCREWED JOINTS.

2. 3/8" PLYWOOD BACKS, TOPS AND BOTTOMS, WITH MAPLE PRINT INTERIOR.

3. 1/2" PLYWOOD SIDES, WITH MAPLE PRINT INTERIOR.

4. 3/4" PLYWOOD SHELVING WITH A MAPLE PRINT ON BOTH SIDES AND ONE EDGE.
   ALL SHELVES ARE ADJUSTABLE WITH BASE CABINETS HAVING 1/2 DEPTH SHELVES,
   SUPPORTED BY SHELF CLIPS.

5. DOOR STYLE
   PLEASE REFER TO THE DOOR STYLE PAGES 19-26 FOR ADDITIONAL INFORMATION.

6. ONE PIECE ADJUSTABLE HINGE.
   DOOR UPGRADE OPTION:
   1. ADJUSTABLE SOFT CLOSE HINGE

7. CABINET ENDS:
   1. ARCTIC COLOR - ENDS WILL BE CLOSLEY MATCHING PRINT TO ARCTIC COLOR
   2. ALL OTHER COLORS - ENDS WILL BE MAPLE PRINT (NOT MATCHING THE SELECTED FINISH COLOR)
   3. OPTIONAL ATTACHED FINISHED END SKINS MAY BE ADDED TO THE CABINET.

8. STANDARD FINISH CONSISTS OF NON WIPING STAIN, A COAT OF SELF SEALING CONVERSION VARNISH & A
   TOP COAT OF CONVERSION VARNISH. FINISH THICKNESS APPROXIMATELY 7 MIL. WET.

9. 3/4" HARDWOOD DRAWER FRONTS, PAINTED MAPLE WILL BE 3/4" HDF FRONTS.

10. SELF ADJUSTING EPOXY COATED 3/4 EXTENSION SIDE MOUNT DRAWER GUIDES.
    TRACK UPGRADE OPTION:
    1. UPGRADE TO A BLUM 7/8 EXTENSION UNDERMOUNT SOFT CLOSE TRACK
       (DOES NOT INCLUDE 5/8" SOLID HARDWOOD DOVETAIL DRAWER BOX)

11. DRAWER BOX - 1/2" RABBETED PLYWOOD DRAWER WITH 1/4" FLOOR, AND 3/4 EXTENSION SIDE MOUNT.
    DRAWER UPGRADE OPTION:
    1. 5/8" SOLID HARDWOOD DOVETAIL DRAWER BOX WITH BLUM 7/8 EXTENSION UNDERMOUNT SOFT CLOSE
       TRACK

KCMA CERTIFIED
MEETS KCMA ESP STANDARD
C.A.R.B. PHASE II COMPLIANT

Koch Midland

CABINET SPECIFICATIONS FOR HYBRID

BASE CABINET

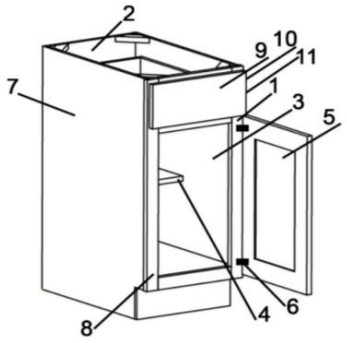

WALL CABINET

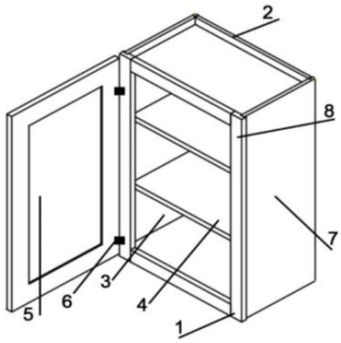

THE HYBRID PLYWOOD SERIES

1. 3/4" x 1 1/2" HARDWOOD FACE FRAMES WITH GLUED AND POCKET SCREWED JOINTS.

2. 3/8" PARTICLE BOARD BACKS, TOPS AND BOTTOMS WITH MAPLE PRINT INTERIOR.

3. WALL CABINETS: 1/2" PLYWOOD SIDES WITH MAPLE PRINT INTERIOR. 3/8" TOPS AND BOTTOMS WILL BE PARTICLE BOARD.
BASE & VANITY CABINETS: 1/2" PLYWOOD TOEKICKS AND SIDES, AND 3/8" PLYWOOD BOTTOM FLOOR WITH MAPLE PRINT INTERIOR.
PANTRY CABINETS: 1/2" PLYWOOD TOEKICKS AND SIDES, AND 3/8" PLYWOOD BOTTOM FLOOR WITH MAPLE PRINT INTERIOR.

4. 3/4" PARTICLE BOARD SHELVING WITH A MAPLE PRINT ON BOTH SIDES AND ONE EDGE.
ALL SHELVES ARE ADJUSTABLE WITH BASE CABINETS HAVING 1/2 DEPTH SHELVES,
SUPPORTED BY SHELF CLIPS.

5. DOOR STYLE
PLEASE REFER TO THE DOOR STYLE PAGES 19-26 FOR ADDITIONAL INFORMATION.

6. ONE PIECE ADJUSTABLE HINGE.
DOOR UPGRADE OPTION:
1. ADJUSTABLE SOFT CLOSE HINGE

7. CABINET ENDS:
1. ARCTIC COLOR - ENDS WILL BE CLOSLEY MATCHING PRINT TO ARCTIC COLOR
2. ALL OTHER COLORS - ENDS WILL BE MAPLE PRINT (NOT MATCHING THE SELECTED FINISH COLOR)
3. OPTIONAL ATTACHED FINISHED END SKINS MAY BE ADDED TO THE CABINET.

8. STANDARD FINISH CONSISTS OF NON WIPING STAIN, A COAT OF SELF SEALING CONVERSION VARNISH & A
TOP COAT OF CONVERSION VARNISH. FINISH THICKNESS APPROXIMATELY 7 MIL. WET.

9. 3/4" HARDWOOD DRAWER FRONTS, PAINTED MAPLE WILL BE 3/4" HDF FRONTS.

10. SELF ADJUSTING EPOXY COATED 3/4 EXTENSION SIDE MOUNT DRAWER GUIDES.
TRACK UPGRADE OPTION:
1. UPGRADE TO A BLUM 7/8 EXTENSION UNDERMOUNT SOFT CLOSE TRACK
(DOES NOT INCLUDE 5/8" SOLID HARDWOOD DOVETAIL DRAWER BOX)

11. DRAWER BOX - 1/2" RABBETED PLYWOOD DRAWER WITH 1/4" FLOOR, AND 3/4 EXTENSION SIDE MOUNT.
DRAWER UPGRADE OPTION:
1. 5/8" SOLID HARDWOOD DOVETAIL DRAWER BOX WITH BLUM 7/8 EXTENSION UNDERMOUNT SOFT CLOSE TRACK

KCMA CERTIFIED
MEETS KCMA ESP STANDARD
C.A.R.B. PHASE II COMPLIANT

STANDARD OVERLAY

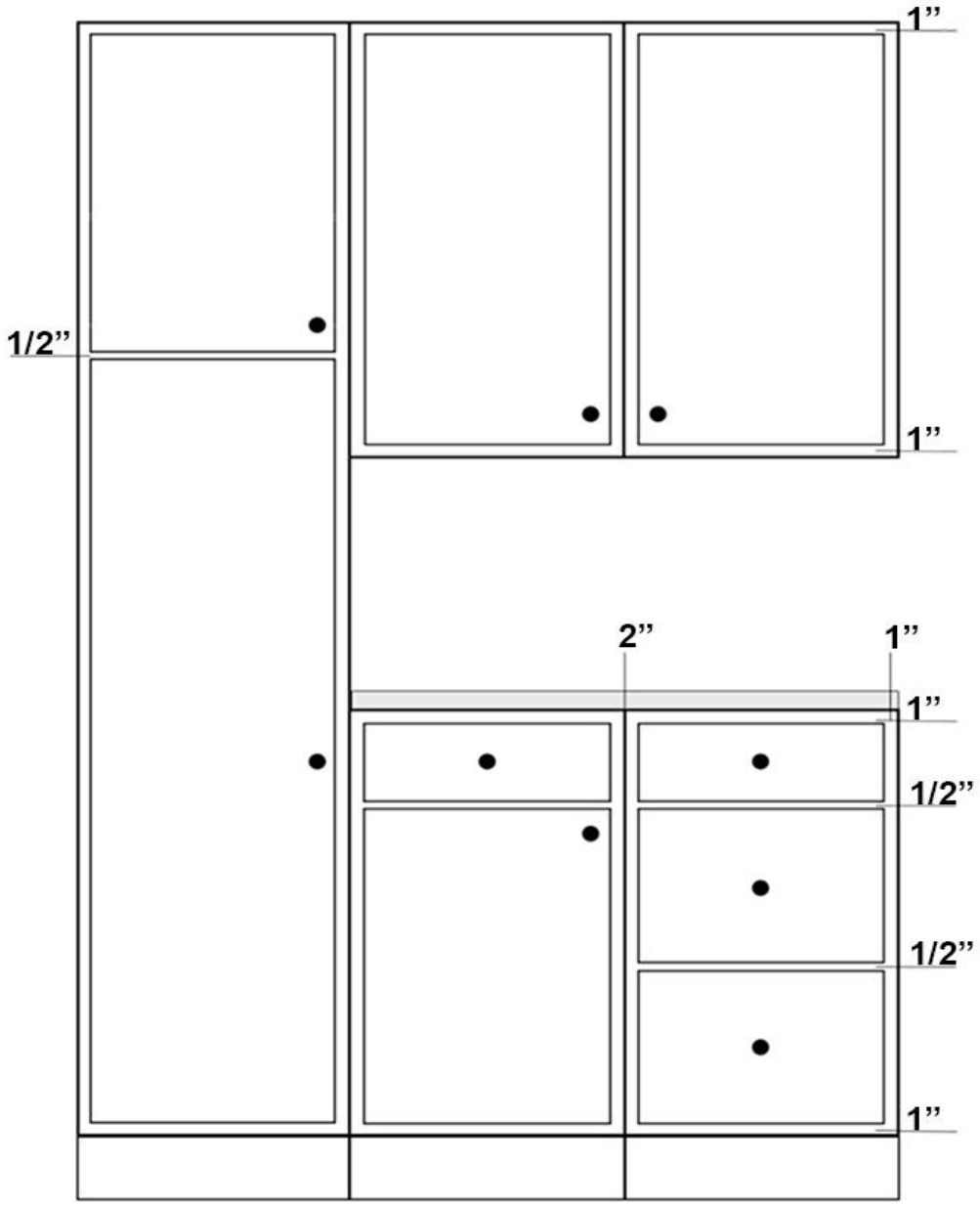

Vertical reveals between doors or drawers of connecting cabinets will be 2". Horizontal reveals between stacked drawers, between drawers and doors, and between stacked doors will be 1/2". Reveals at the top and bottom of walls, talls, bases, office, and vanities will be 1".

MODIFIED FULL OVERLAY

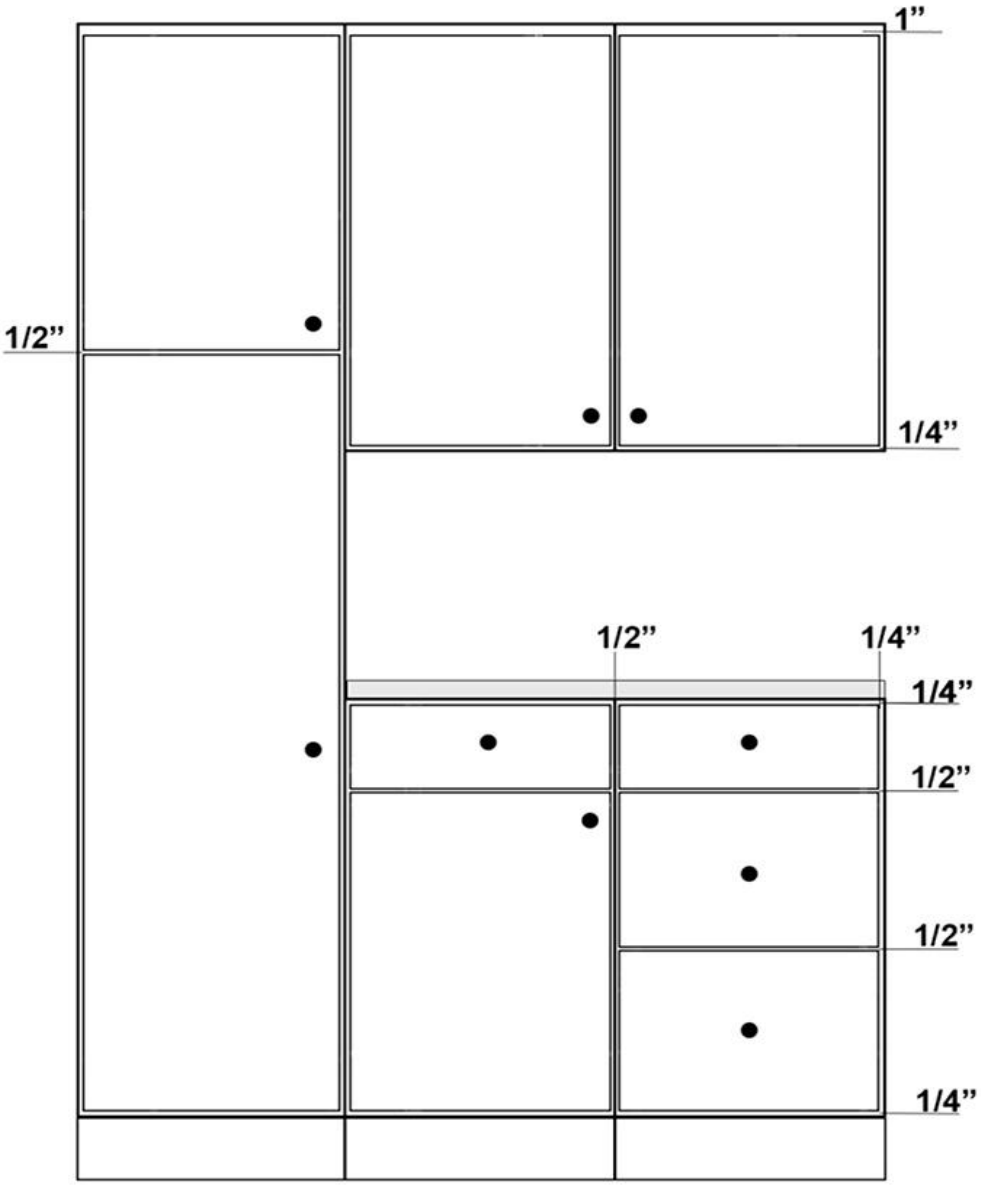

Vertical reveals between doors or drawers of connecting cabinets will be 1/2". Horizontal reveals between stacked drawers, between drawers and doors, and between stacked doors will be 1/2". Reveals at the top of wall and tall cabinets will be 1" and the bottom will be 1/4". Reveals at the top and bottom of base, office, and vanity cabinets will be 1/4".

Blind Base and Wall - door overlaps blind side 1/2".

CABINET CARE

INTERIORS:
The interiors of the Koch Cabinets are surfaced with a Maple grained print that resists most stains, scuffs, and mars.

CLEANING:
Koch hardwood exteriors have a high quality finish on the wood that brings out its full beauty. We recommend cleaning the interior and exterior of your cabinets once a month with a clean damp sponge or cloth. If a spill occurs, it is important to clean up the spill and dry the surface right away.

A spill left unattended will soak through the Maple print and cause damage. We do not recommend using paper towels because of their abrasiveness. To remove food residue or grease, use clean suds with a mild soap and water mixture. Do not use cleaners that have any abrasive additive, bleach or ammonia. These cleaners will cause damage to your cabinet finish. Dishcloths used for other cleaning should never be used as they could contain remnants of harsh chemicals or grease.

Following cleaning, wipe all excess moisture off the cabinet fronts and door backs.

CAUTION
The most common form of damage done to cabinetry during normal maintenance is over scrubbing of the finishes, especially the edge profiles.

Excess moisture can damage any cabinet finish. Areas near the sink, dishwasher, range, oven and baseboards are the most susceptible. Keep these areas dry.

Koch Cabinets have a high quality varnish finish and waxing is not necessary. Furniture polish may be used if waxing is preferred. Make sure to wipe off any excess polish to avoid build-up.

COLOR VARIANCE:
Colors of all products change as they age. Various wood species will react in different ways depending on their exposure to the sun as well as the environment they are located in.

STAIN BLOCK AND SAMPLE DOOR EXPIRATION:
A sample block will not show the full range of color and grain variations. We recommend you view a door sample or a full cabinet display before making your final selection. Koch Cabinets will not replace or refund cabinets because of variations in color or wood grain from a sample block. All stain blocks and sample doors have a date on them. It is our recommendation that they be replaced when that date is more than 2 years old.

FURNITURE FINISH:
All finishes are glossier when freshly finished. The gloss level will tone down after approximately 6 months, depending on the environmental exposure.

CABINET DOOR BACKS:
Door backs will not be finished to the same level of artistic detail as the front. They will have the same blending color and durability as the front of the door. Please have door samples for your customers to view.

HARDWARE ADJUSTMENTS

DOOR ADJUSTMENT DIRECTIONS FOR BLUMOTION HINGE

Three-dimensional adjustment

Side adjustment

Rotate the front cam screw to increase or decrease door overlay (+/- 1/16").

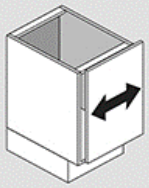

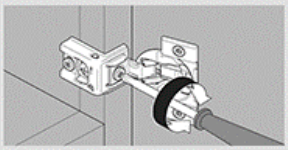

Height adjustment

Loosen installation screws to adjust door position (+/- 1/8"), then retighten.

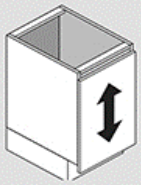

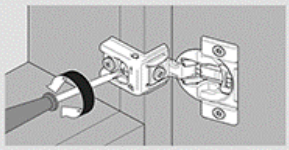

Depth adjustment

Rotate the rear cam screw to adjust door gap (+ 3/32", - 1/32").

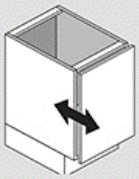

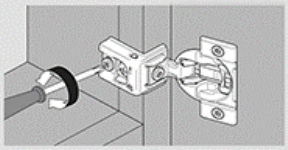

BLUMOTION DEACTIVATION

Switch on the hinge cup

For small or light doors, the BLUMOTION can be deactivated on one of the hinges. COMPACT BLUMOTION comes in the activated position, marked with a "I". The deactivated position is marked with a "0".

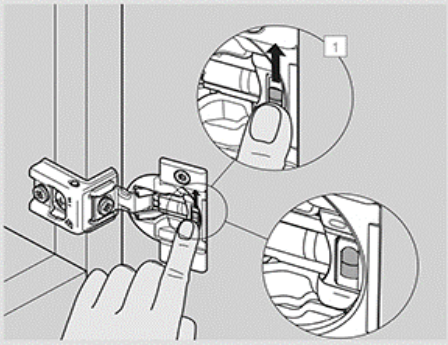

Door must be closed once for the deactivation to be complete. To reactivate, move switch back to the original position "I".

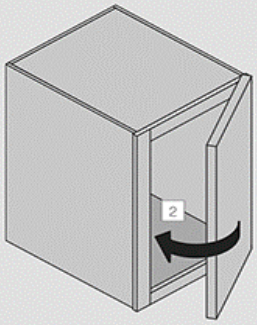

COMPACT BLUMOTION ANGLE RESTRICTION CLIP - ASSEMBLY INSTRUCTIONS

Step 1 — Remove door

Loosen and remove installation screws.

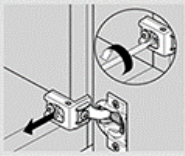

Step 2 — Rotate hinge arm

Rotate hinge arm to closed position.

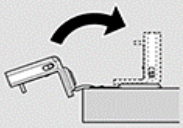

Step 3 — Insert angle restriction clip

Insert angle restriction clip (38C315B3) into base of hinge arm and secure.

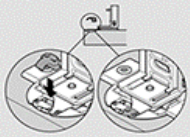

Step 4 — Rotate hinge arm

Rotate hinge arm to open position.

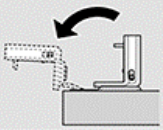

Step 5 — Reattach door

Align door and reattach by inserting and tightening installation screws.

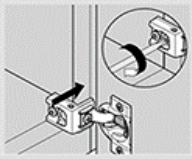

HARDWARE ADJUSTMENTS

TANDEM plus BLUMOTION — **563H/563. installation instructions**

blum

Height adjustment	Tilt adjustment	Depth adjustment on runner
1 Press up on adjustment tab 2 Push towards back of drawer	Rotate the tilt adjustment lever on the rear of each runner to lift the back of the drawer and tilt the top of the drawer front forward	TANDEM 563 runners feature elongated holes that allow ±**4.5** (3/16") depth adjustment
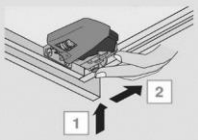	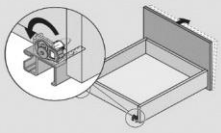	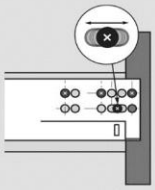
Maximum **3** (1/8") rise of drawer front (tool-free)	Maximum **5** (3/16") rise of drawer back (tool-free)	

NOTE: Height and tilt adjustments available with all combinations of locking devices and runners

NOTES OR ADDITIONS

DOOR STYLES

Koch Midland

ASHLAND DOOR STYLE

USE PRICE COLUMN "B"

AVAILABLE IN STANDARD OR MOD FULL OVERLAY

3/4" HDF ENGINEERED WOOD PANEL WITH 1/2" WIDE APPLIED HDF MOLDING

OPEN FRAME DOOR WILL BE STILE AND RAIL DESIGN

DRAWER FRONTS WILL MIMIC DOOR STYLE

PAINTED DRAWER FRONT WILL BE 3/4" HDF ENGINEERED WOOD WITH 1/2" WIDE APPLIED HDF MOLDING

	PAINT GRADE - HD	MAPLE	*RUSTIC MAPLE
NATURAL	NA	NA	NA
STAIN			
CASHEW	NA	NA	NA
ESPRESSO	NA	NA	NA
FAWN	NA	NA	NA
NUTMEG	NA	NA	NA
PEBBLE	NA	NA	NA
SADDLE	NA	NA	NA
PAINT			
ARCTIC		NA	NA
DUSK		NA	NA
EVERGREEN FOG		NA	NA
GRAPHITE		NA	NA
NAVAL		NA	NA
OYSTER		NA	NA
SHOJI WHITE		NA	NA
SLATE BLUE		NA	NA
TAUPE		NA	NA

***SEE PAGE 4 FOR RUSTIC MAPLE UPCHARGE**

Koch Midland

HIGHLAND DOOR STYLE

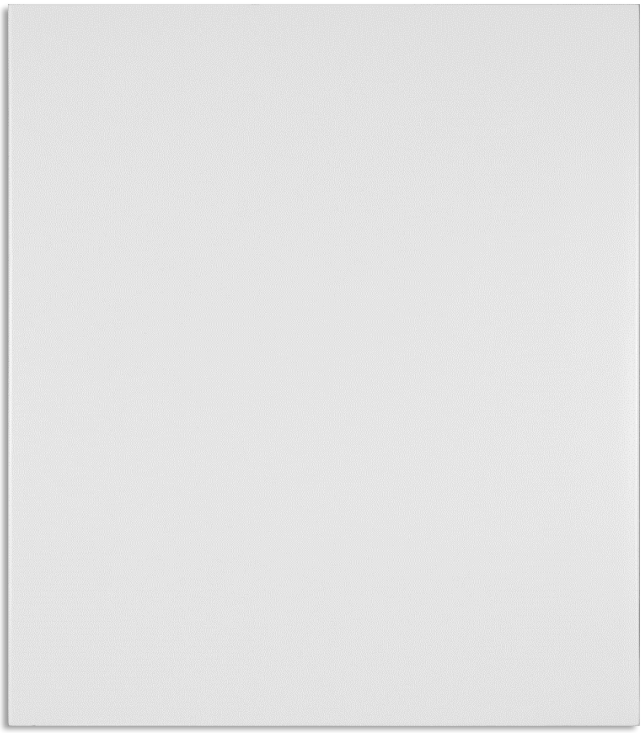

USE PRICE COLUMN "A"

AVAILABLE IN STANDARD OR MOD FULL OVERLAY

3/4" HDF ENGINEERED WOOD PANEL WITH SOFTENED EDGES

OPEN FRAME DOOR WILL BE STILE AND RAIL DESIGN

NO 5PC DRAWER FRONTS

PAINTED DRAWER FRONT WILL BE 3/4" HDF ENGINEERED WOOD WITH SOFTENED EDGES

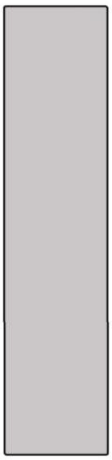

3/4" PANEL

	PAINT GRADE - HD	MAPLE	*RUSTIC MAPLE
NATURAL	NA	NA	NA
STAIN			
CASHEW	NA	NA	NA
ESPRESSO	NA	NA	NA
FAWN	NA	NA	NA
NUTMEG	NA	NA	NA
PEBBLE	NA	NA	NA
SADDLE	NA	NA	NA
PAINT			
ARCTIC		NA	NA
DUSK		NA	NA
EVERGREEN FOG		NA	NA
GRAPHITE		NA	NA
NAVAL		NA	NA
OYSTER		NA	NA
SHOJI WHITE		NA	NA
SLATE BLUE		NA	NA
TAUPE		NA	NA

***SEE PAGE 4 FOR RUSTIC MAPLE UPCHARGE**

Koch Midland

LIBERTY DOOR STYLE

USE PRICE COLUMN "C"

AVAILABLE IN STANDARD OR MOD FULL OVERLAY

3/4" DOOR WITH WOOD EDGEBANDING

OPEN FRAME DOOR WILL BE STILE AND RAIL DESIGN

NO 5PC DRAWER FRONTS

3/4 DRAWER FRONT WITH WOOD EDGEBANDING

	PAINT GRADE - HD	MAPLE	*RUSTIC MAPLE
NATURAL	NA		NA
STAIN			
CASHEW	NA		NA
ESPRESSO	NA		NA
FAWN	NA		NA
NUTMEG	NA		NA
PEBBLE	NA		NA
SADDLE	NA		NA
PAINT			
ARCTIC	NA	NA	NA
DUSK	NA	NA	NA
EVERGREEN FOG	NA	NA	NA
GRAPHITE	NA	NA	NA
NAVAL	NA	NA	NA
OYSTER	NA	NA	NA
SHOJI WHITE	NA	NA	NA
SLATE BLUE	NA	NA	NA
TAUPE	NA	NA	NA

***SEE PAGE 4 FOR RUSTIC MAPLE UPCHARGE**

Koch Midland

NOVA DOOR STYLE

USE PRICE COLUMN "C"

AVAILABLE IN STANDARD OR MOD FULL OVERLAY

PAINTS WILL BE 3/16" HDF PANEL

2 1/8" STILES AND RAILS WITH 1/2" WIDE APPLIED HDF MOLDING

5 PC DRAWER FRONTS ONLY - NO UPCHARGE

5 PC DRAWER FRONTS WILL MIMIC DOOR STYLE

PAINTED DRAWER FRONT WILL BE
3/4" HDF ENGINEERED WOOD.
2 1/8" STILES & 2 1/8" OR 1 1/2" RAILS WITH
1/2" WIDE APPLIED HDF MOLDING.

	PAINT GRADE - HD	MAPLE	*RUSTIC MAPLE
NATURAL	NA	NA	NA
STAIN			
CASHEW	NA	NA	NA
ESPRESSO	NA	NA	NA
FAWN	NA	NA	NA
NUTMEG	NA	NA	NA
PEBBLE	NA	NA	NA
SADDLE	NA	NA	NA
PAINT			
ARCTIC		NA	NA
DUSK		NA	NA
EVERGREEN FOG		NA	NA
GRAPHITE		NA	NA
NAVAL		NA	NA
OYSTER		NA	NA
SHOJI WHITE		NA	NA
SLATE BLUE		NA	NA
TAUPE		NA	NA

***SEE PAGE 4 FOR RUSTIC MAPLE UPCHARGE**

Koch Midland

PIONEER DOOR STYLE

USE PRICE COLUMN "A"

AVAILABLE IN STANDARD AND MOD FULL OVERLAY

STAINS WILL HAVE A 3/16" VENEERED PANEL INSERT
PAINTS WILL BE A 3/16" HDF PANEL
2 1/8" STILES AND RAILS

AVAILABLE WITH 5 PC DRAWER FRONTS
*SEE PAGE 4 FOR 5 PC DRAWER FRONT UPGRADE CHARGES
2 1/8" STILES & 2 1/8" OR 1 1/2" RAILS

STAINED SLAB FRONT WILL BE 3/4" HARDWOOD
PAINTED DRAWER FRONT WILL BE 3/4" ENGINEERED WOOD WITH SOFTENED EDGES

28 DEGREE
INSIDE BEVEL

	PAINT GRADE - HD	MAPLE	*RUSTIC MAPLE
NATURAL	NA		NA
STAIN			
CASHEW	NA		
ESPRESSO	NA		NA
FAWN	NA		
NUTMEG	NA		
PEBBLE	NA		NA
SADDLE	NA		NA
PAINT			
ARCTIC		NA	NA
DUSK		NA	NA
EVERGREEN FOG		NA	NA
GRAPHITE		NA	NA
NAVAL		NA	NA
OYSTER		NA	NA
SHOJI WHITE		NA	NA
SLATE BLUE		NA	NA
TAUPE		NA	NA

***SEE PAGE 4 FOR RUSTIC MAPLE UPCHARGE**

Koch Midland

STOCKTON DOOR STYLE

USE PRICE COLUMN "A"

AVAILABLE IN STANDARD OR MOD FULL OVERLAY

STAINS WILL HAVE A 3/16" VENEERED PANEL INSERT
PAINTS WILL BE A 3/16" HDF PANEL

2 1/8" STILES & 2 1/8" OR 1 1/2" RAILS

AVAILABLE WITH 5 PC DRAWER FRONTS
*SEE PAGE 4 FOR 5 PC DRAWER FRONT UPGRADE CHARGES

STAINED SLAB FRONT WILL BE 3/4" HARDWOOD
PAINTED DRAWER FRONT WILL BE 3/4" ENGINEERED WOOD WITH SOFTENED EDGES

	PAINT GRADE - HD	MAPLE	*RUSTIC MAPLE
NATURAL	NA		NA
STAIN			
CASHEW	NA		NA
ESPRESSO	NA		NA
FAWN	NA		NA
NUTMEG	NA		NA
PEBBLE	NA		NA
SADDLE	NA		NA
PAINT			
ARCTIC		NA	NA
DUSK		NA	NA
EVERGREEN FOG		NA	NA
GRAPHITE		NA	NA
NAVAL		NA	NA
OYSTER		NA	NA
SHOJI WHITE		NA	NA
SLATE BLUE		NA	NA
TAUPE		NA	NA

***SEE PAGE 4 FOR RUSTIC MAPLE UPCHARGE**

Koch Midland

TIPTON DOOR STYLE

1 3/4" 5/8"

USE PRICE COLUMN "B"

AVAILABLE IN STANDARD OR MOD FULL OVERLAY

3/4" HDF ENGINEERED WOOD PANEL WITH SOFT EDGES

OPEN FRAME DOOR WILL BE STILE AND RAIL DESIGN

DRAWER FRONTS WILL MIMIC DOOR STYLE

PAINTED DRAWER FRONT WILL BE 3/4" HDF ENGINEERED WOOD WITH SOFTENED EDGES

	PAINT GRADE - HD	MAPLE	*RUSTIC MAPLE
NATURAL	NA	NA	NA
STAIN			
CASHEW	NA	NA	NA
ESPRESSO	NA	NA	NA
FAWN	NA	NA	NA
NUTMEG	NA	NA	NA
PEBBLE	NA	NA	NA
SADDLE	NA	NA	NA
PAINT			
ARCTIC		NA	NA
DUSK		NA	NA
EVERGREEN FOG		NA	NA
GRAPHITE		NA	NA
NAVAL		NA	NA
OYSTER		NA	NA
SHOJI WHITE		NA	NA
SLATE BLUE		NA	NA
TAUPE		NA	NA

***SEE PAGE 4 FOR RUSTIC MAPLE UPCHARGE**

DOOR STYLES

DOOR OPTIONS

OPEN FRAME DOOR - PREP FOR GLASS	**OPENFRAMEDR-A**	0	EA
	ASHLAND, HIGHLAND, LIBERTY & TIPTON DOOR STYLES WILL BE STILE AND RAIL		
	NO PANEL		
	GLASS AND CLIPS NOT INCLUDED		
	FOR WALL CABINETS ONLY		

NOTES OR ADDITIONS

Koch Midland

WALL DIMENSIONS

STANDARD & REFRIGERATOR WALL W/ONE DOOR OR BUTT DOORS

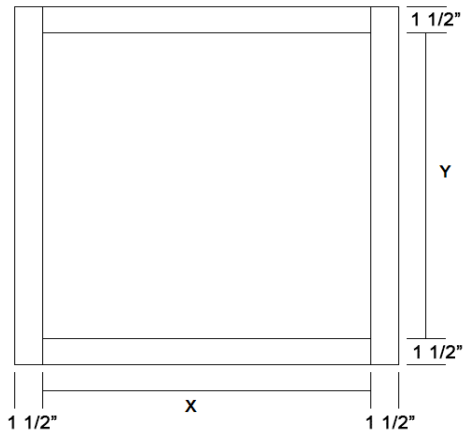

Opening Size Calculation
Cabinet Width - 3" = X
Cabinet Height - 3" = Y

42", 45" & 48" WIDE WALL CABINETS W/MULLION

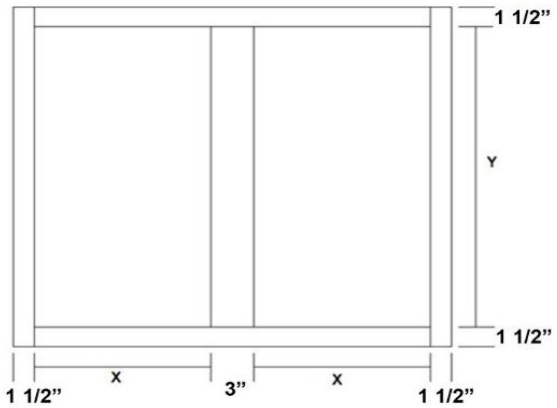

Opening Size Calculation
Cabinet Width - 6" /2 = X
Cabinet Height - 3" = Y

WALL BLIND CORNER W/ONE DOOR OR BUTT DOORS

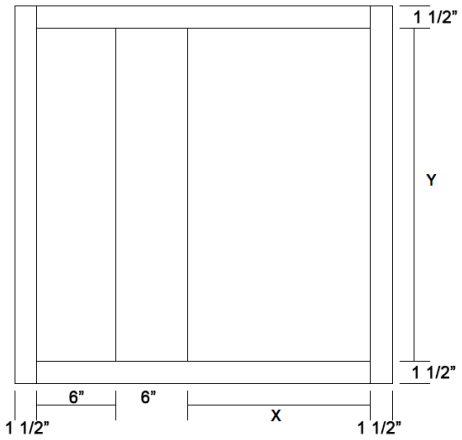

Cabinet Width - 15" = X
Cabinet Height - 3" = Y

DIAGONAL WALL CABINETS - FRONT VIEW

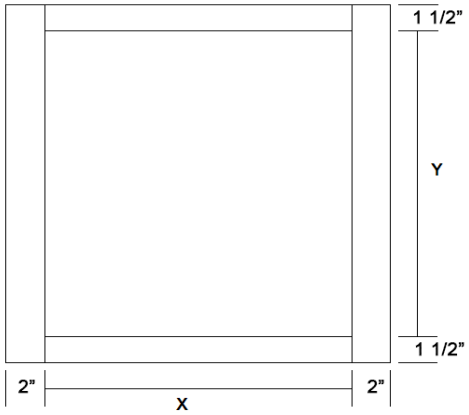

Cabinet Width - 4" = X
Cabinet Height - 3" = Y

24W - 12" DEEP DIAGONAL WALL CABINETS - TOP VIEW

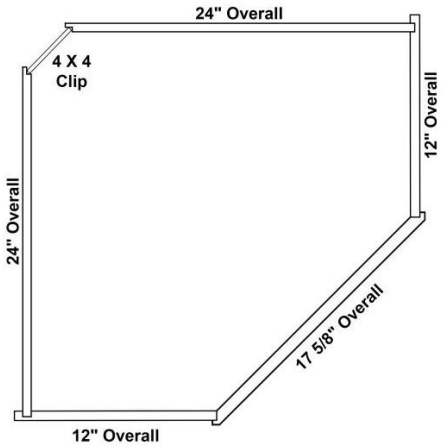

27W - 15" DEEP DIAGONAL WALL CABINETS - TOP VIEW

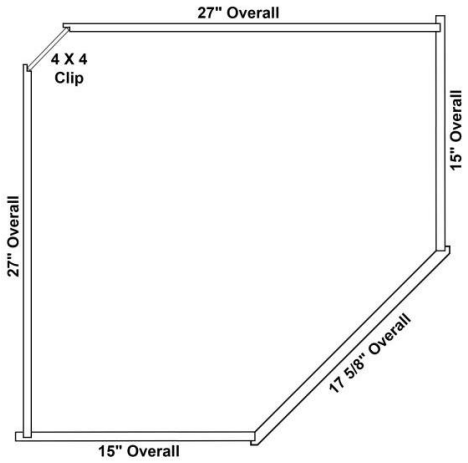

TOE KICK IS RECESSED BACK 3"

Koch Midland

A. Highland, Pioneer, Stockton
B. Ashland, Tipton
C. Liberty, Nova

Wall Cabinets

STANDARD WALL CABINETS

12", 15", 18" TALL - NO SHELF

STANDARD WALL WITH ONE DOOR

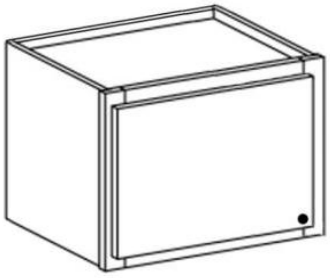

W918L

STANDARD WALL WITH BUTT DOORS

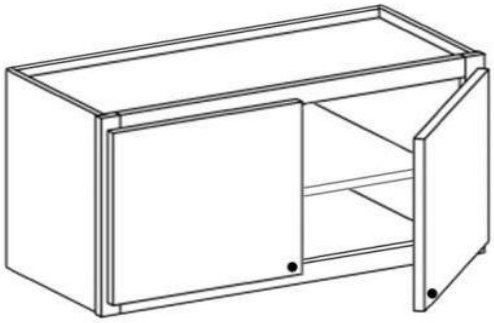

W2718-2B

12" DEEP CABINET		Price		
		A	B	C
W912L	9" X 12"	200	216	230
W912R	9" X 12"	200	216	230
W1212L	12" X 12"	210	226	240
W1212R	12" X 12"	210	226	240
W1512L	15" X 12"	220	236	250
W1512R	15" X 12"	220	236	250
W1812L	18" X 12"	230	246	260
W1812R	18" X 12"	230	246	260
W2112L	21" X 12"	240	256	270
W2112R	21" X 12"	240	256	270
W2412L	24" X 12"	250	266	280
W2412R	24" X 12"	250	266	280
W2412-2B	24" X 12"	296	312	326
W2712-2B	27" X 12"	306	322	337
W3012-2B	30" X 12"	316	332	348
W3312-2B	33" X 12"	326	342	359
W3612-2B	36" X 12"	336	353	370
W3712-2B	37" X 12"	340	357	374
W3912-2B	39" X 12"	345	362	380
W915L	9" X 15"	211	227	241
W915R	9" X 15"	211	227	241
W1215L	12" X 15"	221	237	251
W1215R	12" X 15"	221	237	251
W1515L	15" X 15"	231	247	261
W1515R	15" X 15"	231	247	261
W1815L	18" X 15"	241	257	271
W1815R	18" X 15"	241	257	271
W2115L	21" X 15"	251	267	281
W2115R	21" X 15"	251	267	281
W2415L	24" X 15"	261	277	291
W2415R	24" X 15"	261	277	291
W2415-2B	24" X 15"	320	336	357
W2715-2B	27" X 15"	331	347	368
W3015-2B	30" X 15"	342	359	376
W3315-2B	33" X 15"	353	371	388
W3615-2B	36" X 15"	363	381	399
W3715-2B	37" X 15"	368	386	405
W918L	9" X 18"	222	238	252
W918R	9" X 18"	222	238	252
W1218L	12" X 18"	232	248	262
W1218R	12" X 18"	232	248	262
W1518L	15" X 18"	242	258	272
W1518R	15" X 18"	242	258	272
W1818L	18" X 18"	252	268	282
W1818R	18" X 18"	252	268	282
W2118L	21" X 18"	262	278	292
W2118R	21" X 18"	262	278	292
W2418L	24" X 18"	272	288	302
W2418R	24" X 18"	272	288	302
W2418-2B	24" X 18"	338	356	374
W2718-2B	27" X 18"	350	368	386
W3018-2B	30" X 18"	360	378	396
W3318-2B	33" X 18"	372	391	409
W3618-2B	36" X 18"	376	395	414
W3718-2B	37" X 18"	381	400	419
W3918-2B	39" X 18"	390	410	429

Koch Midland

A. Highland, Pioneer, Stockton
B. Ashland, Tipton
C. Liberty, Nova

Wall Cabinets

STANDARD WALL CABINETS

21" TALL - NO SHELF
24" & 27" TALL - ONE ADJUSTABLE SHELF
30" & 36" TALL - TWO ADJUSTABLE SHELVES

STANDARD WALL WITH ONE DOOR

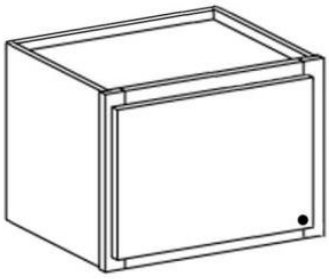

W930L

STANDARD WALL WITH BUTT DOORS

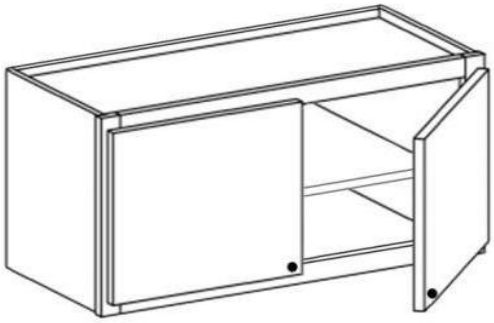

W2730-2B

42", 45" & 48" WIDE CABINET W/MULLION

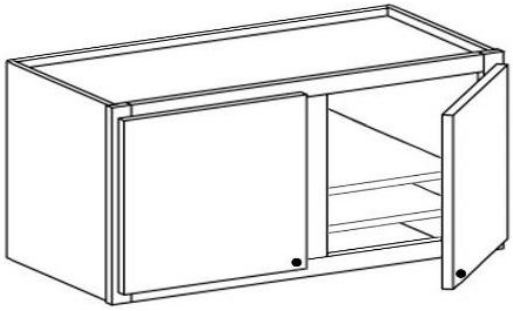

W4230

12" DEEP CABINET		Price		
		A	B	C
W3021-2B	30" X 21"	372	390	398
W3321-2B	33" X 21"	386	404	412
W3621-2B	36" X 21"	406	424	432
W3721-2B	37" X 21"	410	428	436
W3921-2B	39" X 21"	418	436	444
W3024-2B	30" X 24"	405	425	446
W3324-2B	33" X 24"	421	442	463
W3624-2B	36" X 24"	434	456	477
W3724-2B	37" X 24"	441	463	485
W3924-2B	39" X 24"	450	473	495
W3027-2B	30" X 27"	577	606	635
W930L	9" X 30"	251	264	276
W930R	9" X 30"	251	264	276
W1230L	12" X 30"	267	280	294
W1230R	12" X 30"	267	280	294
W1530L	15" X 30"	284	298	312
W1530R	15" X 30"	284	298	312
W1830L	18" X 30"	303	318	333
W1830R	18" X 30"	303	318	333
W2130L	21" X 30"	320	336	352
W2130R	21" X 30"	320	336	352
W2430L	24" X 30"	339	356	373
W2430R	24" X 30"	339	356	373
W2430-2B	24" X 30"	380	399	418
W2730-2B	27" X 30"	444	466	488
W3030-2B	30" X 30"	460	483	506
W3330-2B	33" X 30"	480	504	528
W3630-2B	36" X 30"	496	521	546
W3930-2B	39" X 30"	518	544	570
W4230	42" X 30"	535	562	589
W4530	45" X 30"	551	578	605
W4830	48" X 30"	582	611	640
W936L	9" X 36"	361	379	397
W936R	9" X 36"	361	379	397
W1236L	12" X 36"	380	399	418
W1236R	12" X 36"	380	399	418
W1536L	15" X 36"	400	420	440
W1536R	15" X 36"	400	420	440
W1836L	18" X 36"	419	440	461
W1836R	18" X 36"	419	440	461
W2136L	21" X 36"	437	459	481
W2136R	21" X 36"	437	459	481
W2436L	24" X 36"	457	480	503
W2436R	24" X 36"	457	480	503
W2436-2B	24" X 36"	499	524	549
W2736-2B	27" X 36"	572	601	629
W3036-2B	30" X 36"	572	601	629
W3336-2B	33" X 36"	611	642	672
W3636-2B	36" X 36"	611	642	672
W3936-2B	39" X 36"	650	683	715
W4236	42" X 36"	670	704	737
W4536	45" X 36"	684	718	751
W4836	48" X 36"	725	761	798

Wall Cabinets

STANDARD WALL CABINETS

39" & 42" TALL - THREE ADJUSTABLE SHELVES

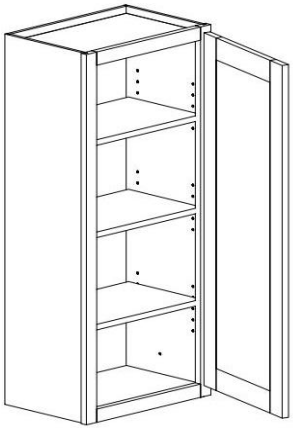

W1842L

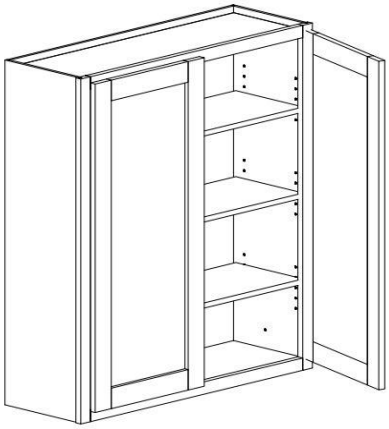

W3642-2B

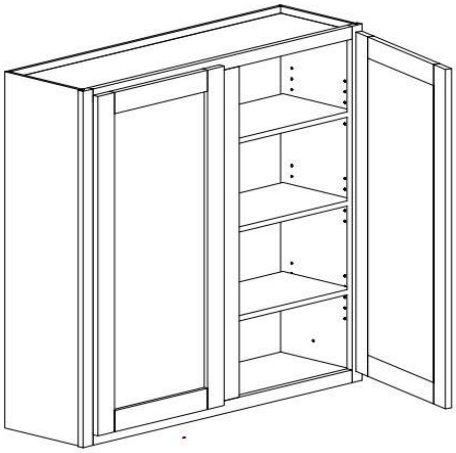

W4242

42", 45" & 48" WIDE W/MULLION

12" DEEP CABINET		Price		
		A	B	C
W939L	9" X 39"	449	467	485
W939R	9" X 39"	449	467	485
W1239L	12" X 39"	470	488	506
W1239R	12" X 39"	470	488	506
W1539L	15" X 39"	493	511	529
W1539R	15" X 39"	493	511	529
W1839L	18" X 39"	515	533	551
W1839R	18" X 39"	515	533	551
W2139L	21" X 39"	536	554	572
W2139R	21" X 39"	536	554	572
W2439L	24" X 39"	559	577	595
W2439R	24" X 39"	559	577	595
W2439-2B	24" X 39"	599	617	635
W2739-2B	27" X 39"	684	702	720
W3039-2B	30" X 39"	704	722	740
W3339-2B	33" X 39"	728	746	764
W3639-2B	36" X 39"	750	768	786
W3939-2B	39" X 39"	771	789	807
W4239	42" X 39"	821	839	857
W4539	45" X 39"	845	863	881
W4839	48" X 39"	865	883	901
W942L	9" X 42"	461	484	507
W942R	9" X 42"	461	484	507
W1242L	12" X 42"	483	507	531
W1242R	12" X 42"	483	507	531
W1542L	15" X 42"	505	530	556
W1542R	15" X 42"	505	530	556
W1842L	18" X 42"	527	553	580
W1842R	18" X 42"	527	553	580
W2142L	21" X 42"	550	578	605
W2142R	21" X 42"	550	578	605
W2442L	24" X 42"	572	601	629
W2442R	24" X 42"	572	601	629
W2442-2B	24" X 42"	612	643	673
W2742-2B	27" X 42"	698	733	768
W3042-2B	30" X 42"	717	753	789
W3342-2B	33" X 42"	742	779	816
W3642-2B	36" X 42"	764	802	840
W3942-2B	39" X 42"	786	825	865
W4242	42" X 42"	836	878	920
W4542	45" X 42"	855	897	919
W4842	48" X 42"	885	929	974

Wall Cabinets

STANDARD WALL CABINETS

12", 15" & 18" TALL - NO SHELF
24" & 27" TALL - ONE ADJUSTABLE SHELF
30", 33" & 36" TALL - TWO ADJUSTABLE SHELVES

STANDARD WALL WITH ONE DOOR

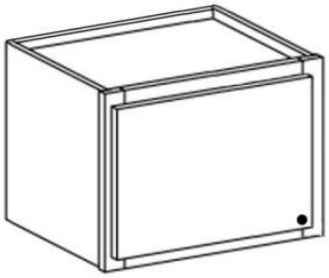

W930U15L

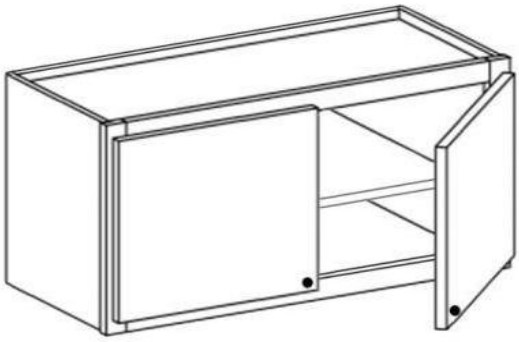

W2730U15-2B

15" DEEP CABINET		Price		
		A	B	C
W3012U15-2B	30" X 12"	537	564	591
W3312U15-2B	33" X 12"	545	572	600
W3612U15-2B	36" X 12"	554	582	609
W3712U15-2B	37" X 12"	559	587	615
W3912U15-2B	39" X 12"	564	592	622
W3015U15-2B	30" X 15"	553	581	608
W3315U15-2B	33" X 15"	562	590	618
W3615U15-2B	36" X 15"	573	602	630
W3715U15-2B	37" X 15"	579	608	637
W3018U15-2B	30" X 18"	569	597	626
W3318U15-2B	33" X 18"	578	607	636
W3618U15-2B	36" X 18"	591	621	650
W3718U15-2B	37" X 18"	596	626	656
W3918U15-2B	39" X 18"	601	631	663
W3024U15-2B	30" X 24"	624	655	686
W3324U15-2B	33" X 24"	633	665	696
W3624U15-2B	36" X 24"	654	687	719
W3724U15-2B	37" X 24"	660	693	726
W3027U15-2B	30" X 27"	788	827	868
W930U15L	9" X 30"	487	511	537
W930U15R	9" X 30"	487	511	537
W1230U15L	12" X 30"	506	531	556
W1230U15R	12" X 30"	506	531	556
W1530U15L	15" X 30"	524	550	578
W1530U15R	15" X 30"	524	550	578
W1830U15L	18" X 30"	544	571	600
W1830U15R	18" X 30"	544	571	600
W2130U15L	21" X 30"	562	590	620
W2130U15R	21" X 30"	562	590	620
W2430U15L	24" X 30"	582	611	642
W2430U15R	24" X 30"	582	611	642
W2430U15-2B	24" X 30"	626	657	690
W2730U15-2B	27" X 30"	692	727	763
W3030U15-2B	30" X 30"	708	743	780
W3330U15-2B	33" X 30"	729	766	804
W3630U15-2B	36" X 30"	746	783	822
W936U15L	9" X 36"	605	635	667
W936U15R	9" X 36"	605	635	667
W1236U15L	12" X 36"	626	657	690
W1236U15R	12" X 36"	626	657	690
W1536U15L	15" X 36"	646	678	712
W1536U15R	15" X 36"	646	678	712
W1836U15L	18" X 36"	664	697	732
W1836U15R	18" X 36"	664	697	732
W2136U15L	21" X 36"	685	719	755
W2136U15R	21" X 36"	685	719	755
W2436U15L	24" X 36"	705	740	777
W2436U15R	24" X 36"	705	740	777
W2436U15-2B	24" X 36"	749	786	825
W2736U15-2B	27" X 36"	827	868	911
W3036U15-2B	30" X 36"	844	886	930
W3336U15-2B	33" X 36"	866	909	954
W3636U15-2B	36" X 36"	886	930	977

Wall Cabinets

STANDARD WALL CABINETS

THREE ADJUSTABLE SHELVES IN 39" & 42" TALL

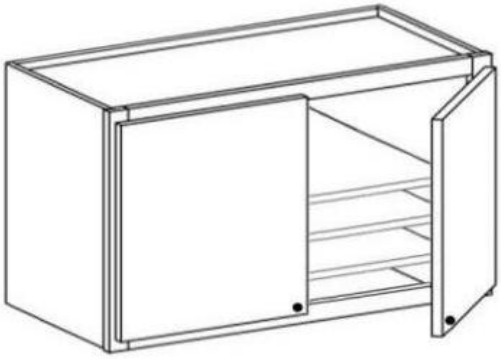

W2442U15-2B

15" DEEP CABINET		Price		
		A	B	C
W939U15L	9" X 39"	666	702	739
W939U15R	9" X 39"	666	702	739
W1239U15L	12" X 39"	687	723	760
W1239U15R	12" X 39"	687	723	760
W1539U15L	15" X 39"	710	746	783
W1539U15R	15" X 39"	710	746	783
W1839U15L	18" X 39"	733	769	806
W1839U15R	18" X 39"	733	769	806
W2139U15L	21" X 39"	753	789	826
W2139U15R	21" X 39"	753	789	826
W2439U15L	24" X 39"	776	812	849
W2439U15R	24" X 39"	776	812	849
W2439U15-2B	24" X 39"	816	852	889
W2739U15-2B	27" X 39"	902	938	975
W3039U15-2B	30" X 39"	920	956	993
W3339U15-2B	33" X 39"	945	981	1018
W3639U15-2B	36" X 39"	971	1007	1044
W942U15L	9" X 42"	710	746	783
W942U15R	9" X 42"	710	746	783
W1242U15L	12" X 42"	732	769	807
W1242U15R	12" X 42"	732	769	807
W1542U15L	15" X 42"	756	794	834
W1542U15R	15" X 42"	756	794	834
W1842U15L	18" X 42"	779	818	859
W1842U15R	18" X 42"	779	818	859
W2142U15L	21" X 42"	801	841	883
W2142U15R	21" X 42"	801	841	883
W2442U15L	24" X 42"	825	866	909
W2442U15R	24" X 42"	825	866	909
W2442U15-2B	24" X 42"	867	910	956
W2742U15-2B	27" X 42"	957	1005	1055
W3042U15-2B	30" X 42"	977	1026	1077
W3342U15-2B	33" X 42"	1003	1053	1106
W3642U15-2B	36" X 42"	1026	1077	1131

REFRIGERATOR WALL CABINETS

NO SHELF IN 12", 15", 18" & 21" TALL, ONE ADJUSTABLE SHELF IN 24" TALL

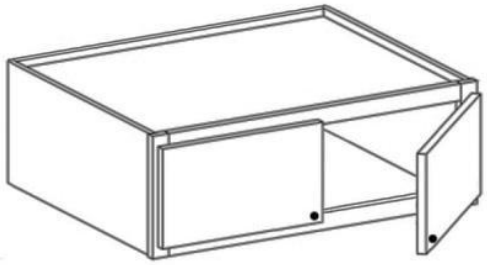

W3012U24-2B

24" DEEP CABINET		Price		
		A	B	C
W3012U24-2B	30" X 12"	361	379	397
W3312U24-2B	33" X 12"	375	394	413
W3612U24-2B	36" X 12"	388	407	427
W3712U24-2B	37" X 12"	394	414	433
W3912U24-2B	39" X 12"	408	428	448
W3015U24-2B	30" X 15"	380	399	418
W3315U24-2B	33" X 15"	400	420	440
W3615U24-2B	36" X 15"	408	428	449
W3715U24-2B	37" X 15"	413	434	454
W3915U24-2B	39" X 15"	427	448	470
W3018U24-2B	30" X 18"	401	421	441
W3318U24-2B	33" X 18"	417	438	459
W3618U24-2B	36" X 18"	430	452	473
W3718U24-2B	37" X 18"	434	456	477
W3918U24-2B	39" X 18"	449	471	493
W3021U24-2B	30" X 21"	429	448	468
W3321U24-2B	33" X 21"	446	465	485
W3621U24-2B	36" X 21"	460	472	492
W3721U24-2B	37" X 21"	465	477	497
W3921U24-2B	39" X 21"	473	495	515
W3024U24-2B	30" X 24"	465	488	512
W3324U24-2B	33" X 24"	485	509	534
W3624U24-2B	36" X 24"	504	529	554
W3724U24-2B	37" X 24"	509	534	560
W3924U24-2B	39" X 24"	529	555	581

Wall Cabinets

WALL DIAGONAL CABINET

WD24'S REQUIRE 24" WALL SPACE FOR INSTALLATION
WD27'S REQUIRE 27" WALL SPACE FOR INSTALLATION
TWO ADJUSTABLE SHELVES IN 30" & 36" TALL,
THREE ADJUSTABLE SHELVES IN 39" & 42" TALL

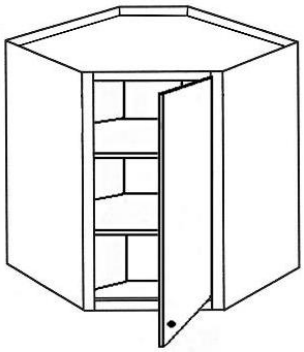

WD2430R

12" DEEP CABINET		Price		
		A	B	C
WD2430L	24" X 30"	468	491	515
WD2430R	24" X 30"	468	491	515
WD2436L	24" X 36"	620	651	682
WD2436R	24" X 36"	620	651	682
WD2439L	24" X 39"	703	719	739
WD2439R	24" X 39"	703	719	739
WD2442L	24" X 42"	713	749	784
WD2442R	24" X 42"	713	749	784

15" DEEP CABINET		Price		
		A	B	C
WD2730U15L	27" X 30"	648	680	713
WD2730U15R	27" X 30"	648	680	713
WD2736U15L	27" X 36"	799	839	879
WD2736U15R	27" X 36"	799	839	879
WD2739U15L	27" X 39"	881	911	941
WD2739U15R	27" X 39"	881	911	941
WD2742U15L	27" X 42"	892	937	981
WD2742U15R	27" X 42"	892	937	981

WALL DIAGONAL CABINET WITH WOOD LAZY SUSAN

TWO TRAYS IN 30" & 36" TALL, THREE TRAYS IN 39" & 42" TALL
18" ROUND WOOD TRAY

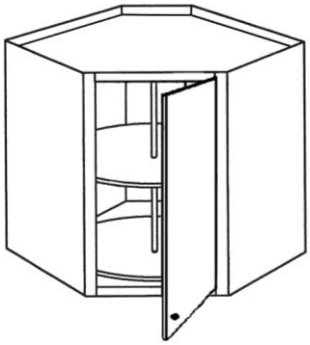

WD2430WLSR

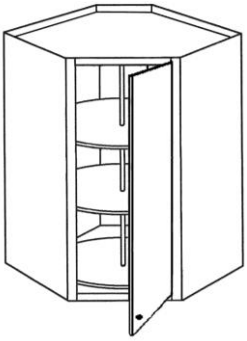

WD2442WLSR

12" DEEP CABINET		Price		
		A	B	C
WD2430WLSL	24" X 30"	1162	1220	1278
WD2430WLSR	24" X 30"	1162	1220	1278
WD2436WLSL	24" X 36"	1238	1296	1354
WD2436WLSR	24" X 36"	1238	1296	1354
WD2439WLSL	24" X 39"	1314	1380	1445
WD2439WLSR	24" X 39"	1314	1380	1445
WD2442WLSL	24" X 42"	1630	1712	1793
WD2442WLSR	24" X 42"	1630	1712	1793

15" DEEP CABINET		Price		
		A	B	C
WD2730U15WLSL	27" X 30"	1342	1409	1476
WD2730U15WLSR	27" X 30"	1342	1409	1476
WD2736U15WLSL	27" X 36"	1493	1568	1642
WD2736U15WLSR	27" X 36"	1493	1568	1642
WD2739U15WLSL	27" X 39"	1643	1718	1792
WD2739U15WLSR	27" X 39"	1643	1718	1792
WD2742U15WLSL	27" X 42"	1809	1899	1990
WD2742U15WLSR	27" X 42"	1809	1899	1990

Wall Cabinets

30", 36", 39", & 42" TALL BLIND CORNER WALL

TWO ADJUSTABLE SHELVES IN 30" & 36" TALL
THREE ADJUSTABLE SHELVES IN 39" & 42" TALL

L AND R REPRESENT BLIND SIDE
DOOR WILL BE HINGED TO BLIND SIDE

CAN PULL UP TO 4", MINIMUM PULL 1"

WC3030L

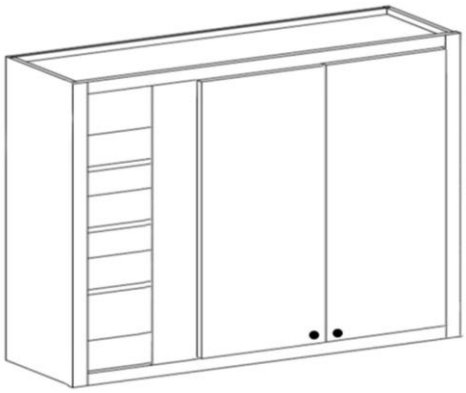

WC3942-2BL

30" TALL BLIND CORNER WALL

12" DEEP CABINET		Price		
		A	B	C
WC3030L	30" X 30"	374	393	411
WC3030R	30" X 30"	374	393	411
WC3630L	36" X 30"	414	435	455
WC3630R	36" X 30"	414	435	455
WC3930-2BL	39" X 30"	454	477	499
WC3930-2BR	39" X 30"	454	477	499
WC4230-2BL	42" X 30"	494	519	543
WC4230-2BR	42" X 30"	494	519	543
WC4530-2BL	45" X 30"	534	561	587
WC4530-2BR	45" X 30"	534	561	587
WC4830-2BL	48" X 30"	574	603	631
WC4830-2BR	48" X 30"	574	603	631

36" TALL BLIND CORNER WALL

12" DEEP CABINET		Price		
		A	B	C
WC3036L	30" X 36"	499	524	549
WC3036R	30" X 36"	499	524	549
WC3636L	36" X 36"	538	565	592
WC3636R	36" X 36"	538	565	592
WC3936-2BL	39" X 36"	578	607	636
WC3936-2BR	39" X 36"	578	607	636
WC4236-2BL	42" X 36"	618	649	680
WC4236-2BR	42" X 36"	618	649	680
WC4536-2BL	45" X 36"	658	691	724
WC4536-2BR	45" X 36"	658	691	724
WC4836-2BL	48" X 36"	708	743	779
WC4836-2BR	48" X 36"	708	743	779

39" TALL BLIND CORNER WALL

12" DEEP CABINET		Price		
		A	B	C
WC3039L	30" X 39"	528	556	584
WC3039R	30" X 39"	528	556	584
WC3639L	36" X 39"	578	606	634
WC3639R	36" X 39"	578	606	634
WC3939-2BL	39" X 39"	628	656	684
WC3939-2BR	39" X 39"	628	656	684
WC4239-2BL	42" X 39"	678	706	734
WC4239-2BR	42" X 39"	678	706	734
WC4539-2BL	45" X 39"	728	756	784
WC4539-2BR	45" X 39"	728	756	784
WC4839-2BL	48" X 39"	778	806	834
WC4839-2BR	48" X 39"	778	806	834

42" TALL BLIND CORNER WALL

12" DEEP CABINET		Price		
		A	B	C
WC3042L	30" X 42"	557	585	613
WC3042R	30" X 42"	557	585	613
WC3642L	36" X 42"	602	632	662
WC3642R	36" X 42"	602	632	662
WC3942-2BL	39" X 42"	652	685	717
WC3942-2BR	39" X 42"	652	685	717
WC4242-2BL	42" X 42"	702	737	772
WC4242-2BR	42" X 42"	702	737	772
WC4542-2BL	45" X 42"	762	800	838
WC4542-2BR	45" X 42"	762	800	838
WC4842-2BL	48" X 42"	802	842	882
WC4842-2BR	48" X 42"	802	842	882

Wall Cabinets

WALL EASY REACH

TWO ADJUSTABLE SHELVES IN 30" & 36" TALL
THREE ADJUSTABLE SHELVES IN 39" & 42" TALL
NOT AVAILABLE WITH SOFT CLOSE HINGES
NO MODIFICATIONS

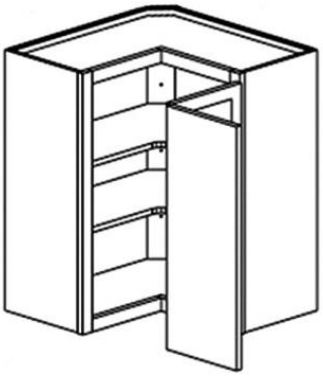

WER2430R

REQUIRES 24" WALL SPACE FOR INSTALLATION

12" DEEP CABINET		Price		
		A	B	C
WER2430L	24" X 30"	633	665	696
WER2430R	24" X 30"	633	665	696
WER2436L	24" X 36"	665	698	732
WER2436R	24" X 36"	665	698	732
WER2439L	24" X 39"	716	735	834
WER2439R	24" X 39"	716	735	834
WER2442L	24" X 42"	735	772	809
WER2442R	24" X 42"	735	772	809

REQUIRES 27" WALL SPACE FOR INSTALLATION

15" DEEP CABINET		Price		
		A	B	C
WER2730U15L	27" X 30"	813	854	894
WER2730U15R	27" X 30"	813	854	894
WER2736U15L	27" X 36"	840	882	924
WER2736U15R	27" X 36"	840	882	924
WER2739U15L	27" X 39"	890	930	975
WER2739U15R	27" X 39"	890	930	975
WER2742U15L	27" X 42"	903	948	993
WER2742U15R	27" X 42"	903	948	993

BUILT IN WALL MICROWAVE

NO SHELF IN 30" AND 36" TALL. ONE ADJUSTABLE SHELF IN 39" & 42" TALL

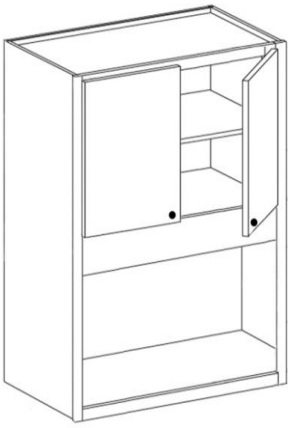

W3042BI-MMW-2B

15" TALL MICROWAVE OPENING W/MAPLE PRINT INTERIOR. 3" RAIL ABOVE MICROWAVE

21" DEEP CABINET		Price		
		A	B	C
W2730BI-MMW-2B	27" X 30"	708	726	838
W3030BI-MMW-2B	30" X 30"	742	759	913
W2736BI-MMW-2B	27" X 36"	756	774	792
W3036BI-MMW-2B	30" X 36"	790	808	826
W2739BI-MMW-2B	27" X 39"	782	800	818
W3039BI-MMW-2B	30" X 39"	797	815	833
W2742BI-MMW-2B	27" X 42"	830	848	866
W3042BI-MMW-2B	30" X 42"	845	863	881

RANGE HOODS

OMEGA SIGNATURE RANGE HOODS W/STRAIGHT PANEL FRONT

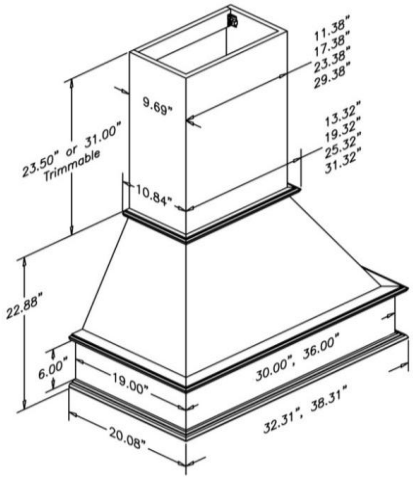

TRIMMABLE CHIMNEY SOLD SEPARATELY

LINERS INCLUDED

IF YOU SELECT RUSTIC MAPLE FOR DOOR STYLE, THE RANGE HOOD WILL BE CLEAR MAPLE

30" WIDE SIGNATURE HOOD		Price	
OMEGA-SR2130SP		3924	EA

36" WIDE SIGNATURE HOOD		Price	
OMEGA-SR2136SP		4169	EA

RANGE HOOD CHIMNEYS

TRIMMABLE CHIMNEY- 23 1/2" T AND 31" T - INCLUDES 2 MOUNTING BOARDS

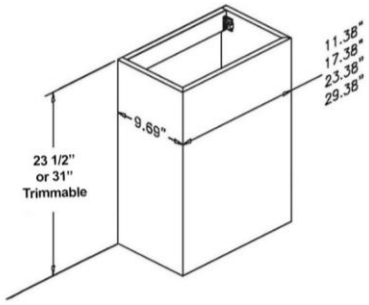

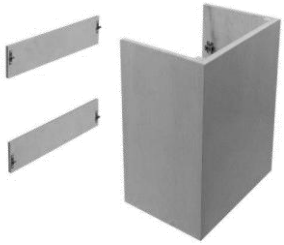

- 400 CFM/6.5 sones [high] - 3-speed rotary switch
- Two bright LED lights [250 lumens]
- Quick-release diswasher safe mesh aluminum filter
- Heat Sentry technology auto turns on when excessive heat is detected

23 1/2" Tall Trimmable Chimney			
OMEGA-RCH30		942	EA
OMEGA-RCH36		1123	EA

31" Tall Trimmable Chimney			
OMEGA-RCHT30		996	EA
OMEGA-RCHT36		1194	EA

Please note, we are not liable or responsible for determining the correct hood ventilation.

STAINLESS STEEL BLOWERS

Broan Ventilation Power Module for 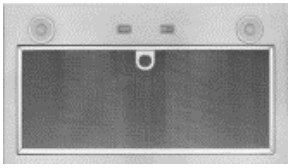 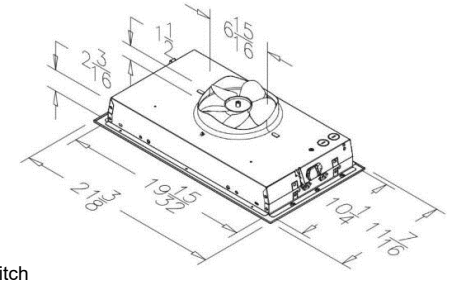 • 260 CFM/7 sones [high]- 2-speed rocker switch • Bright LED lighting [more than 250 lumens] • Quick-release diswasher safe mesh aluminum filter	**OMEGA-PM300**		981	EA
Broan Ventilation Power Module for 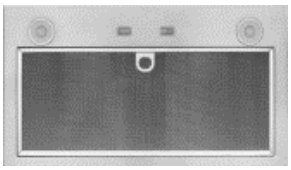 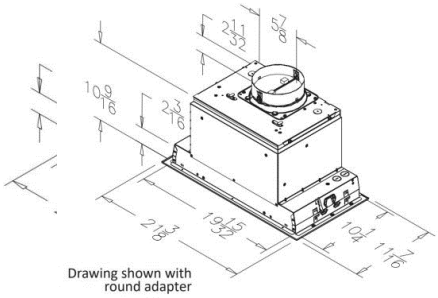 • 400 CFM/6.5 sones [high] - 3-speed rotary switch • Two bright LED lights [250 lumens] • Quick-release diswasher safe mesh aluminum filter • Heat Sentry technology auto turns on when excessive heat is detected	**OMEGA-PM400**		1962	EA
Broan Ventilation Power Module for 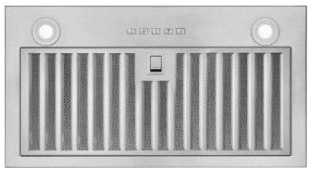 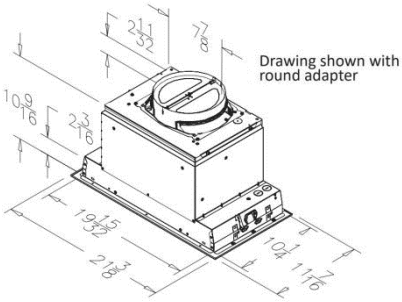 • Wifi enabled & Voice Control • 600 CFM/9.5 sones [high] - 4-speed electronic soft touch controls • 3-level LED lighting [nore than 300 lumens • Baffle-style quick release filter - dishwasher safe • Heat Sentry technology auto turns on when excessive heat is detected	**OMEGA-PM600**		3924	EA

Please note, we are not liable or responsible for determining the correct hood ventilation.

NOTES OR ADDITIONS

Koch Midland

BASE DIMENSIONS

BASE 12" THRU 36" W/ONE DOOR OR BUTT DOORS

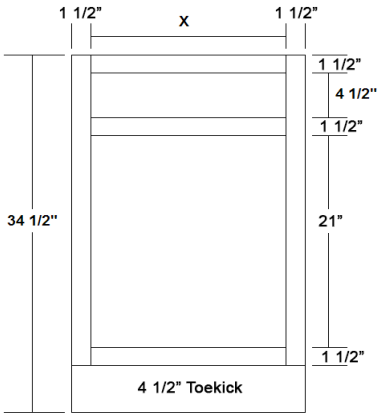

Opening Width Calculation
Cabinet Width - 3" = X

BASE 42", 45" & 48" W/MULLION

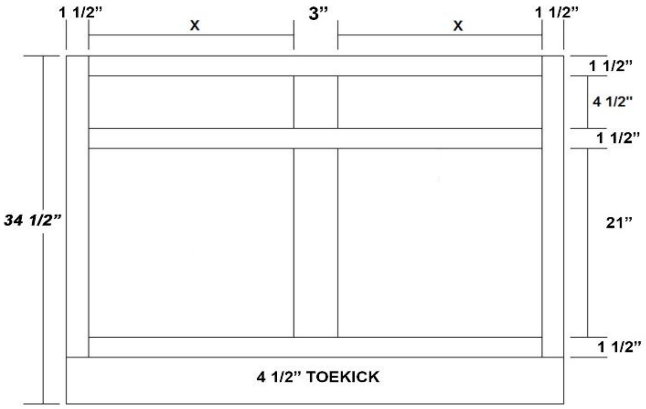

Opening Width Calculation
Drawer Opening is Cabinet Width - 6" / 2 = X

BASE POTS AND PANS WITH TWO DRAWERS

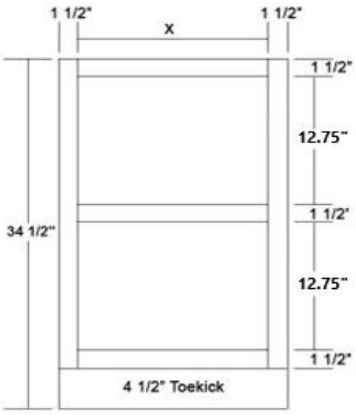

Opening Width Calculation
Cabinet Width - 3" = X

THREE DRAWER BASE AND FOUR DRAWER BASE

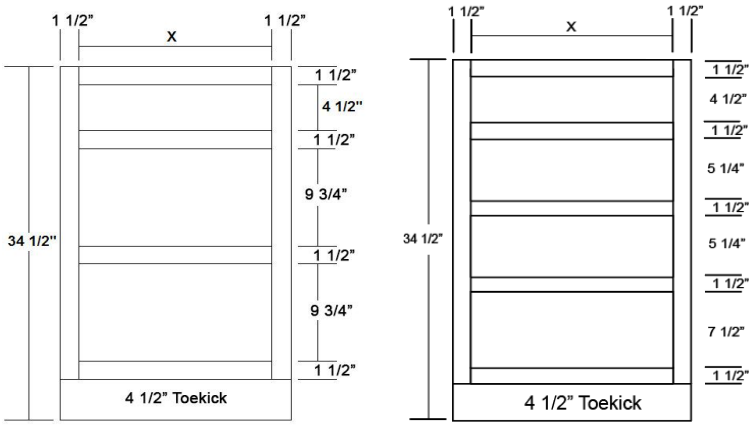

Opening Width Calculation
Cabinet Width - 3" = X

BASE BLIND CORNER

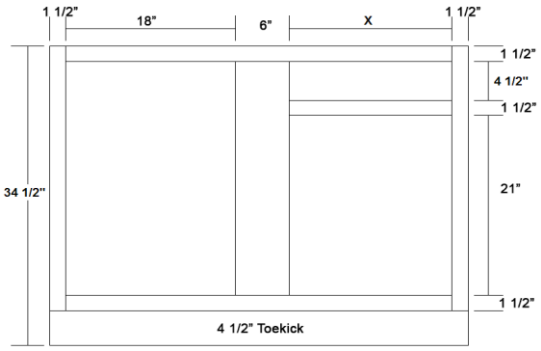

Opening Width Calculation
Cabinet Width - 27" = X

BASE MICROWAVE W/DRAWER

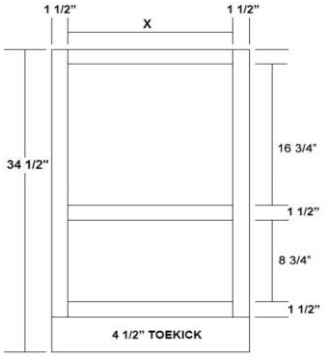

Opening Width Calculation
Cabinet Width - 3" = X

TOE KICK IS RECESSED BACK 3"

BASE DIMENSIONS

BASE EASY REACH
BER33 WITH LAZY SUSAN

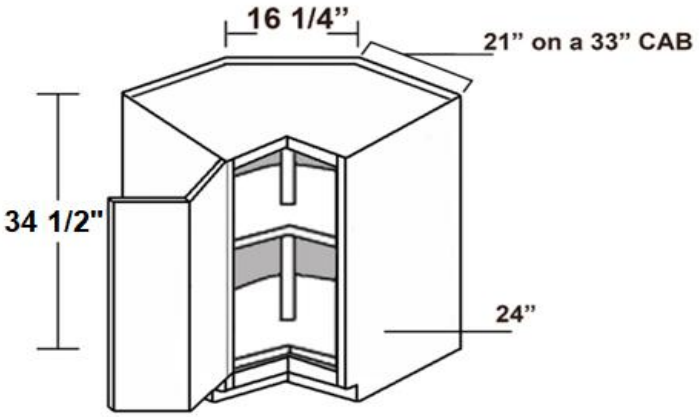

BASE EASY REACH
BER36 WITH LAZY SUSAN

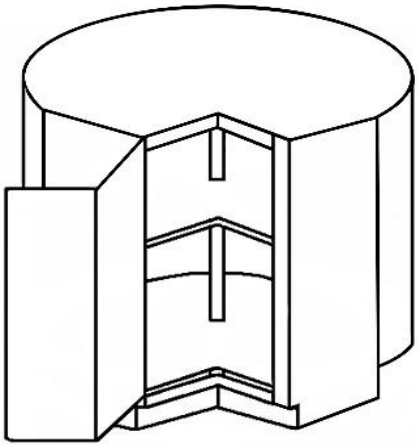

BASE EASY REACH
BER36 WITH TWO ADJUSTABLE SHELVES

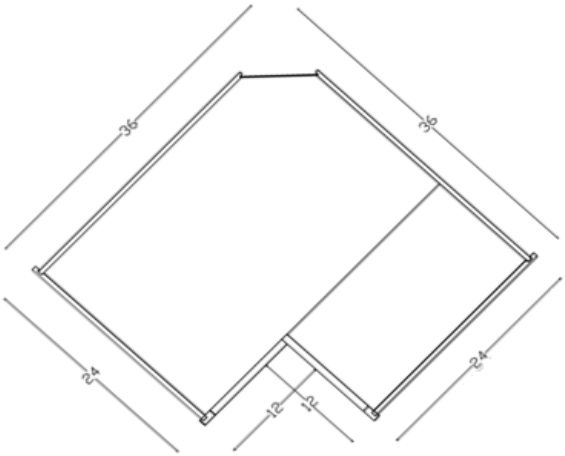

BASE W/ FULL HEIGHT DOOR

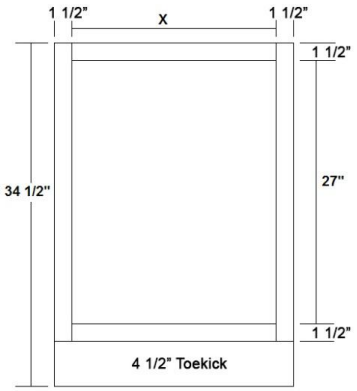

Opening Width Calculation
Cabinet Width - 3" = X

BASE 42", 45" & 48" W/ MULLION & FULL HEIGHT DOOR

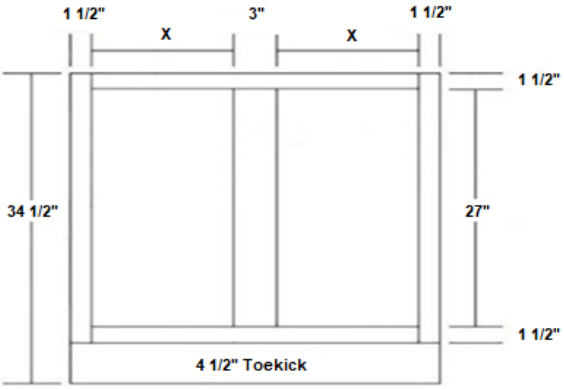

Opening Width Calculation
Door Opening is Cabinet Width - 6" / 2 = X

TOE KICK IS RECESSED BACK 3"

Koch Midland

A. Highland, Pioneer, Stockton
B. Ashland, Tipton
C. Liberty, Nova

BASE CABINETS

34 1/2" TALL BASE WITH FULL HEIGHT DOOR

B9FHD - NO SHELF (EVEN THOUGH ALL CABINETS ARE DRILLED FOR SHELVES)
ALL OTHERS WILL HAVE TWO ADJUSTABLE 1/2 DEPTH SHELVES.
ANY CUSTOM WIDTH REDUCTION UNDER 9" WILL BE A SLAB DOOR.
FULL HEIGHT DOORS - N/A LESS THAN 8" WIDE

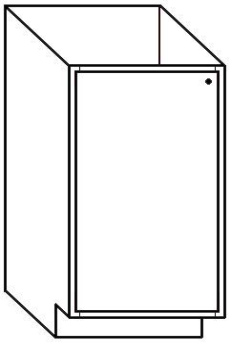

B9FHDL

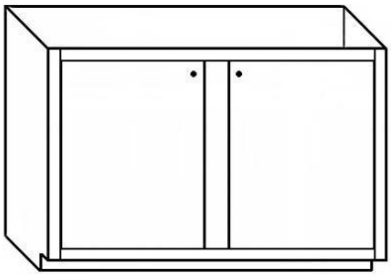

B48FHD

24" DEEP CABINET		Price A	Price B	Price C
B9FHDL	9" X 34.5"	420	441	462
B9FHDR	9" X 34.5"	420	441	462
B12FHDL	12" X 34.5"	445	467	490
B12FHDR	12" X 34.5"	445	467	490
B15FHDL	15" X 34.5"	470	494	517
B15FHDR	15" X 34.5"	470	494	517
B18FHDL	18" X 34.5"	495	520	545
B18FHDR	18" X 34.5"	495	520	545
B21FHDL	21" X 34.5"	520	546	572
B21FHDR	21" X 34.5"	520	546	572
B24FHDL	24" X 34.5"	545	572	600
B24FHDR	24" X 34.5"	545	572	600
B27FHD-2B	27" X 34.5"	675	709	743
B30FHD-2B	30" X 34.5"	700	735	770
B33FHD-2B	33" X 34.5"	725	761	798
B36FHD-2B	36" X 34.5"	750	788	825
B39FHD-2B	39" X 34.5"	775	814	853
B42FHD	42" X 34.5"	800	840	880
B45FHD	45" X 34.5"	825	866	908
B48FHD	48" X 34.5"	850	893	935

34 1/2" TALL WALL DEPTH BASE WITH FULL HEIGHT DOOR

TWO ADJUSTABLE FULL DEPTH SHELVES

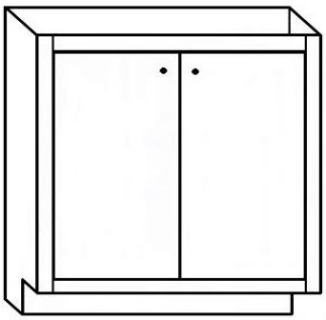

B27U12FHD-2B

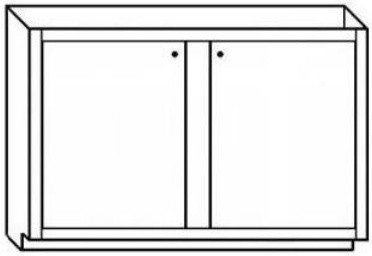

B42U12FHD

12" DEEP CABINET		Price A	Price B	Price C
B12U12FHDL	12" X 34.5"	404	424	444
B12U12FHDR	12" X 34.5"	404	424	444
B15U12FHDL	15" X 34.5"	429	450	472
B15U12FHDR	15" X 34.5"	429	450	472
B18U12FHDL	18" X 34.5"	454	477	499
B18U12FHDR	18" X 34.5"	454	477	499
B21U12FHDL	21" X 34.5"	479	503	527
B21U12FHDR	21" X 34.5"	479	503	527
B24U12FHDL	24" X 34.5"	529	555	582
B24U12FHDR	24" X 34.5"	529	555	582
B27U12FHD-2B	27" X 34.5"	650	683	715
B30U12FHD-2B	30" X 34.5"	675	709	743
B33U12FHD-2B	33" X 34.5"	700	735	770
B36U12FHD-2B	36" X 34.5"	725	761	798
B39U12FHD-2B	39" X 34.5"	750	788	825
B42U12FHD	42" X 34.5"	775	814	853
B45U12FHD	45" X 34.5"	800	840	880
B48U12FHD	48" X 34.5"	825	866	908

34 1/2" TALL STANDARD BASE

ONE ADJUSTABLE 1/2 DEPTH SHELF

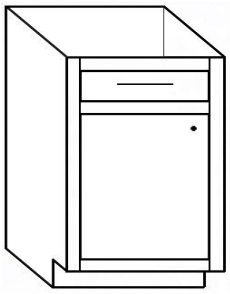

B12L

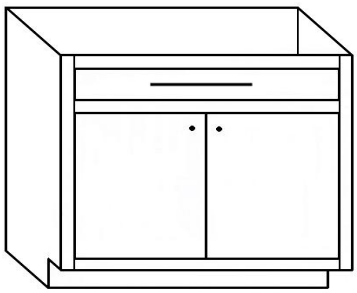

B27-2B

24" DEEP CABINET		Price A	Price B	Price C
B12L	12" X 34.5"	448	470	493
B12R	12" X 34.5"	448	470	493
B15L	15" X 34.5"	473	497	520
B15R	15" X 34.5"	473	497	520
B18L	18" X 34.5"	494	519	543
B18R	18" X 34.5"	494	519	543
B21L	21" X 34.5"	516	542	568
B21R	21" X 34.5"	516	542	568
B24L	24" X 34.5"	538	565	592
B24R	24" X 34.5"	538	565	592
B24-2B	24" X 34.5"	581	610	639
B27-2B	27" X 34.5"	673	707	740
B30-2B	30" X 34.5"	695	730	765
B33-2B	33" X 34.5"	717	753	789
B36-2B	36" X 34.5"	739	776	813
B39-2B	39" X 34.5"	764	802	840

BASE CABINETS

34 1/2" TALL STANDARD BASE W/MULLION AND TWO DOORS - ONE 1/2 DEPTH SHELF

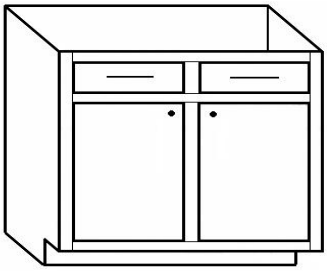

B42

24" DEEP CABINET		Price		
		A	B	C
B42	42" X 34.5"	981	1030	1079
B45	48" X 34.5"	1013	1064	1114
B48	48" X 34.5"	1022	1073	1124

34 1/2" TALL SINK BASE

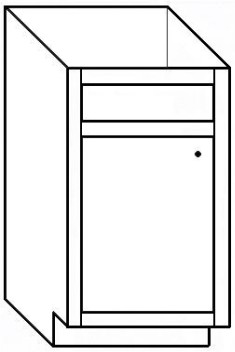

BS24L

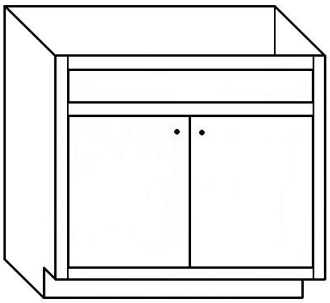

BS30-2B

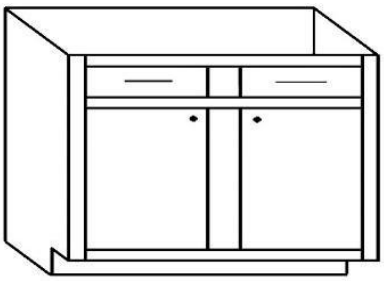

BS42, BS45 & BS48

24" DEEP CABINET		Price		
		A	B	C
BS24L	24" X 34.5"	511	537	562
BS24R	24" X 34.5"	511	537	562
BS24-2B	24" X 34.5"	568	596	625
BS27-2B	27" X 34.5"	580	609	638
BS30-2B	30" X 34.5"	592	622	651
BS33-2B	33" X 34.5"	603	633	663
BS36-2B	36" X 34.5"	621	652	683
BS39-2B	39" X 34.5"	622	653	684
BS42	42" X 34.5"	635	667	699
BS45	45" X 34.5"	642	674	706
BS48	48" X 34.5"	662	695	728

BASE CABINETS

34 1/2" TALL POTS & PANS BASE W/2 DRAWERS

12 3/4" DRAWER OPENING - DRAWER BOX'S ARE 7 1/2" TALL
WITH 7/8 EXTENSION UNDERMOUNT GUIDE

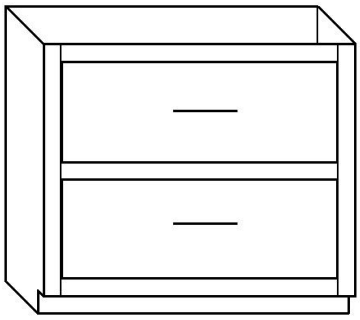

B33MPP

24" DEEP CABINET		Price A	Price B	Price C
B30MPP		1069	1122	1176
B33MPP		1194	1254	1313
B36MPP		1315	1381	1447

34 1/2" TALL BASE FARM SINK CABINET

12" SOLID TOP RAIL W/ BUTT DOORS BELOW
WILL NOT CUT OUT SINK AREA

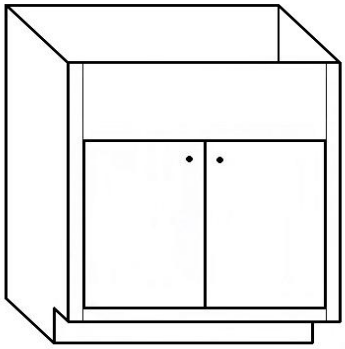

BS36F-2B

24" DEEP CABINET		Price A	Price B	Price C
BS33F-2B		1068	1121	1175
BS36F-2B		1084	1138	1192

34 1/2" TALL MICROWAVE BASE W/DRAWER

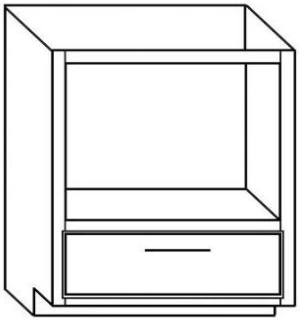

BMW27-MID1.5
MW INTERIOR WILL BE MAPLE PRINT

24" DEEP CABINET		Price A	Price B	Price C
BMW27-MID1.5	27" X 34.5"	1068	1121	1175
BMW30-MID1.5	30" X 34.5"	1084	1138	1192

BASE CABINETS

34 1/2" TALL THREE DRAWER BASE

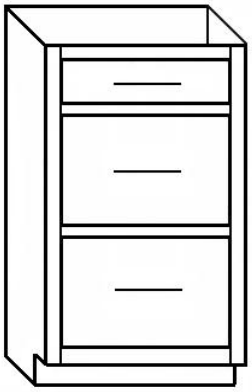

BD12-3

24" DEEP CABINET		Price		
		A	B	C
BD12-3	12" X 34.5"	586	586	586
BD15-3	15" X 34.5"	629	629	629
BD18-3	18" X 34.5"	652	652	652
BD21-3	21" X 34.5"	687	687	687
BD24-3	24" X 34.5"	723	723	723
BD27-3	27" X 34.5"	758	758	758
BD30-3	30" X 34.5"	865	865	865
BD33-3	33" X 34.5"	1108	1108	1108
BD36-3	36" X 34.5"	1229	1229	1229

34 1/2" TALL FOUR DRAWER BASE

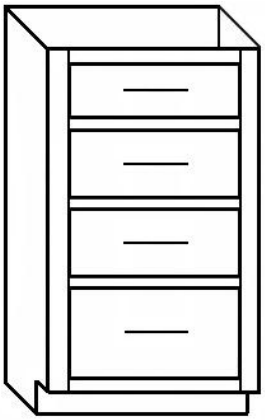

BD36-4

24" DEEP CABINET		Price		
		A	B	C
BD12-4	12" X 34.5"	667	667	667
BD15-4	15" X 34.5"	703	703	703
BD18-4	18" X 34.5"	739	739	739
BD21-4	21" X 34.5"	773	773	773
BD24-4	24" X 34.5"	813	813	813
BD27-4	27" X 34.5"	936	936	936
BD30-4	30" X 34.5"	1064	1064	1064
BD33-4	33" X 34.5"	1189	1189	1189
BD36-4	36" X 34.5"	1310	1310	1310

BASE CABINETS

34 1/2" TALL BASE CABINET WITH TWO 3 1/2" ADJUSTABLE ROLLOUTS

ROLLOUT DRAWERS 3 1/2" TALL

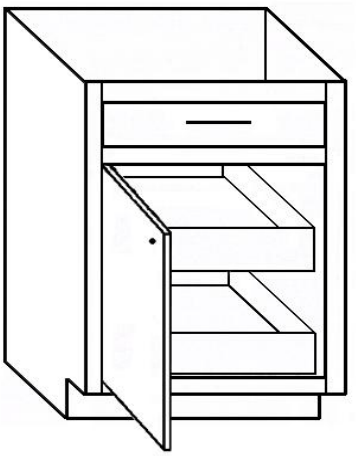

B18-2RL

DRAWER BOX, ROLLOUTS AND TRACK WILL MATCH PER ORDER.
DRAWER BOX/TRACK SELECTION UPCHARGES WILL APPLY.

24" DEEP CABINET		Price		
		A	B	C
B18-2RL	18" X 34.5"	826	867	909
B18-2RR	18" X 34.5"	826	867	909
B21-2RL	21" X 34.5"	848	890	933
B21-2RR	21" X 34.5"	848	890	933
B24-2RL	24" X 34.5"	870	914	957
B24-2RR	24" X 34.5"	870	914	957
B24-2R-2B	24" X 34.5"	912	958	1003
B27-2R-2B	27" X 34.5"	944	991	1038
B30-2R-2B	30" X 34.5"	976	1025	1074
B33-2R-2B	33" X 34.5"	1008	1059	1110
B36-2R-2B	36" X 34.5"	1040	1093	1146
B39-2R-2B	39" X 34.5"	1072	1127	1182

34 1/2" TALL BLIND CORNER

DOOR WILL BE HINGED TO BLIND SIDE
L AND R REPRESENT BLIND SIDE - CAN PULL 4" - MIN. PULL 1"

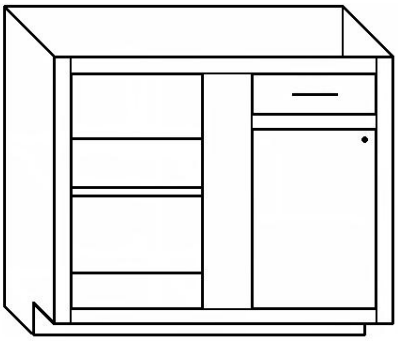

B36BCL

24" DEEP CABINET		Price		
		A	B	C
B36BCL	36" X 34.5"	567	595	624
B36BCR	36" X 34.5"	567	595	624
B39BCL	39" X 34.5"	588	617	647
B39BCR	39" X 34.5"	588	617	647
B42BCL	42" X 34.5"	609	639	670
B42BCR	42" X 34.5"	609	639	670
B45BCL	45" X 34.5"	622	653	684
B45BCR	45" X 34.5"	622	653	684
B48BCL	48" X 34.5"	634	666	697
B48BCR	48" X 34.5"	634	666	697

BASE CABINETS

34 1/2" TALL BASE EASY REACH WITH POLY LAZY SUSAN

NO SOFT CLOSE HINGE
FINISHED SKINS MUST BE ORDERED LOOSE
28" POLY KIDNEY TRAYS
NO MODIFICATIONS

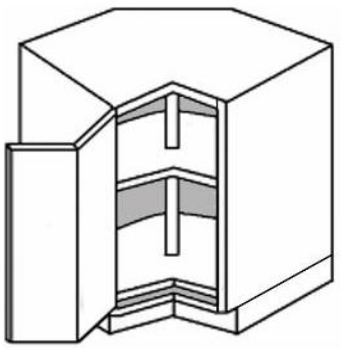

BER33LSL

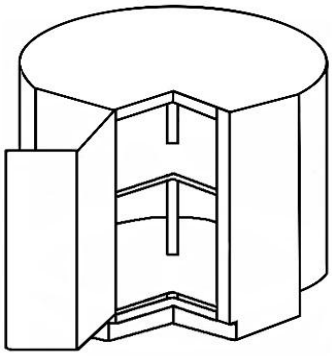

BER36LSL

24" DEEP CABINET		Price		
		A	B	C
BER33LSL	33" X 34.5"	923	969	1015
BER33LSR	33" X 34.5"	923	969	1015
BER36LSL	36" X 34.5"	923	969	1015
BER36LSR	36" X 34.5"	923	969	1015

34 1/2" TALL BASE EASY REACH WITH WOOD LAZY SUSAN

NO SOFT CLOSE HINGE
FINISHED SKINS MUST BE ORDERED LOOSE
28" WOOD KIDNEY TRAYS
NO MODIFICATIONS

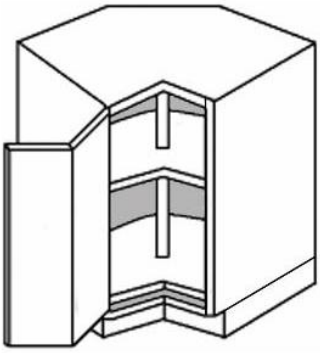

BER33WLSL

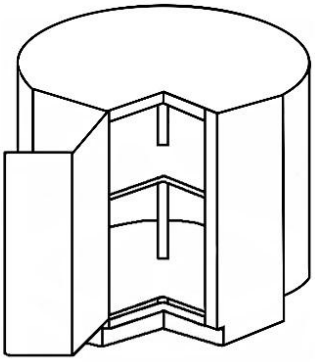

BER36WLSL

24" DEEP CABINET		Price		
		A	B	C
BER33WLSL	33" X 34.5"	1484	1558	1632
BER33WLSR	33" X 34.5"	1484	1558	1632
BER36WLSL	36" X 34.5"	1484	1558	1632
BER36WLSR	36" X 34.5"	1484	1558	1632

34 1/2 TALL BASE EASY REACH W/ TWO ADJUSTABLE SHELVES

NO SOFT CLOSE HINGE
FINISHED SKINS MUST BE ORDERED LOOSE
NO MODIFICATIONS

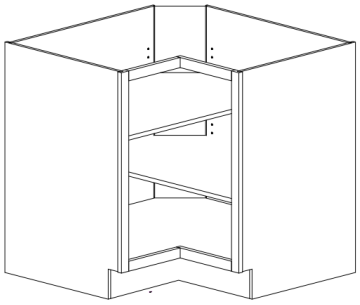

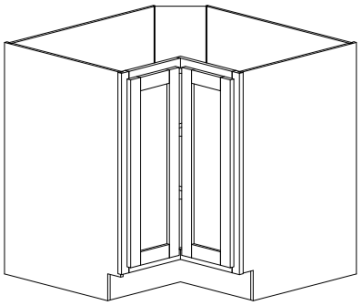

24" DEEP CABINET		PRICE		
		A	B	C
BER36L	36" X 34.5"	923	969	1015
BER36R	36" X 34.5"	923	969	1015

BASE CABINETS

34 1/2" TALL BASE WIRE FRAME TRASH ROLLOUT

BM15TR - HAS RV-15KD-17C S AND HAS 2 - 27 QT CONTAINERS
BM18TR - HAS RV-18KD-17C S AND HAS 2 - 35 QT CONTAINERS

TRASH UNIT WITH RV-DM DOOR MOUNT

24" DEEP CABINET		Price A	Price B	Price C
BM15TRL	15" X 34.5"	878	922	966
BM15TRR	15" X 34.5"	878	922	966
BM18TRL	18" X 34.5"	910	956	1001
BM18TRR	18" X 34.5"	910	956	1001
WITH DOOR MOUNT				
BM15TR-RDK	15" X 34.5"	1078	1132	1186
BM18TR-RDK	18" X 34.5"	1110	1166	1221

34 1/2" TALL BASE TRASH ROLLOUT

BM15WTR INCLUDES TWO 27 QT WASTE CONTAINERS

BM18WTR, BM21WTR, & BM24WTR INCLUDES TWO 35 QT WASTE CONTAINERS

24" DEEP CABINET		Price A	Price B	Price C
BM15WTR	15" X 34.5"	1118	1174	1230
BM18WTR	18" X 34.5"	1146	1203	1261
BM21WTR	21" X 34.5"	1166	1224	1283
BM24WTR	24" X 34.5"	1188	1247	1307
SOFT CLOSE TRACK				

34 1/2" FULL HEIGHT BASE TRASH ROLLOUT

BM18FHDWTR-SC & BM21FHDWTR-SC HAVE TWO 50 QT CONTAINERS **(NO LIDS)**

24" DEEP CABINET		Price A	Price B	Price C
BM18FHDWTR-SC	18" X 34.5"	1146	1203	1261
BM21FHDWTR-SC	21" X 34.5"	1166	1224	1283
SOFT CLOSE TRACK				

BASE CABINETS

DIAGONAL SINK FRONT

DOES NOT INCLUDE FLOOR - USE CODE BELOW

ONE WIDE FALSE DRAWER FRONT

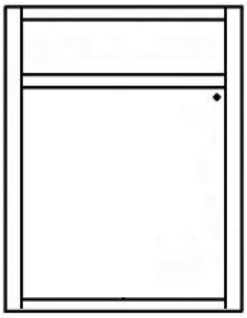

MBSF36DIAR
FRONT OPENING SIZE - 17 5/8"

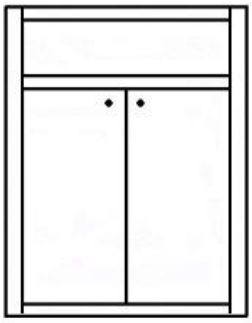

MBSF42DIA-2B
FRONT OPENING SIZE - 26 1/16"

CABINET		Price A	Price B	Price C
MBSF36DIAR		450	473	495
MBSF36DIAL		450	473	495
MBSF42DIA-2B		465	488	512

BASE CORNER SINK FLOOR

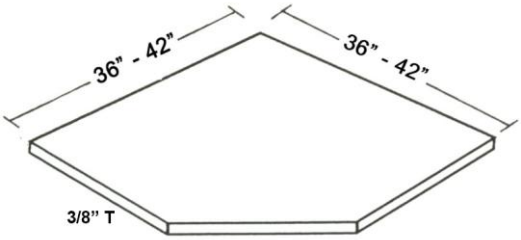

SINK FLOOR		Price A		
MCSF-FLOOR36DIA		120		
MCSF-FLOOR42DIA		135		

Koch Midland

VANITY DIMENSIONS

VANITY BASE 30" THRU 33" WIDE

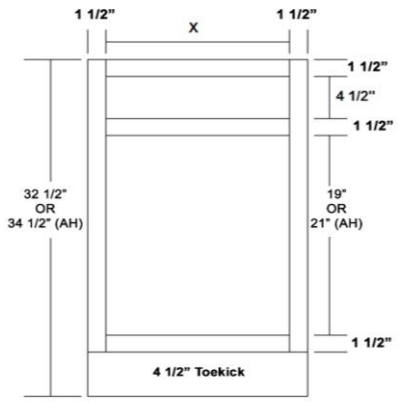

Opening Width Calculation
Cabinet Width - 3" = X

VANITY SINK BASE 12" THRU 36" WIDE

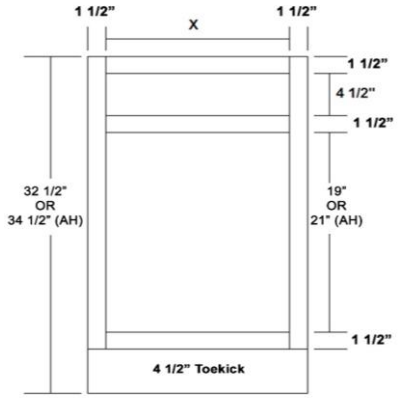

Opening Width Calculation
Cabinet Width - 3" = X

VANITY SINK W/SIDE DRAWERS (36" & 39" WIDE)

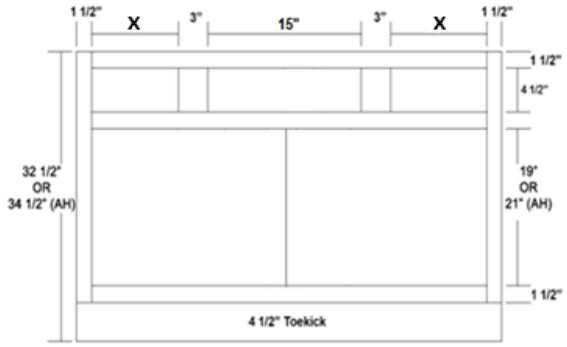

Opening Width Calculation
Cabinet Width: - 24" / 2 = X

VANITY SINKS W/SIDE DRAWERS (42" & 48" WIDE)

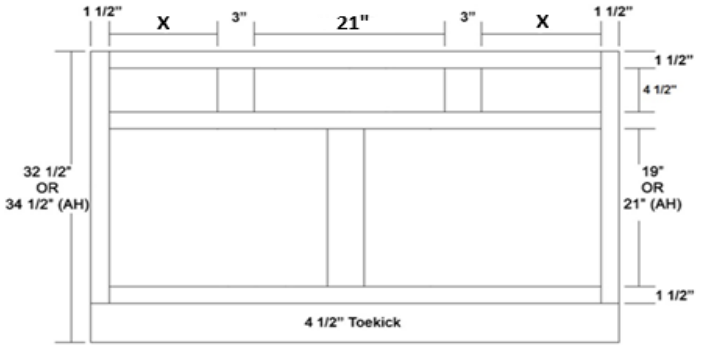

Opening Width Calculation
42"W Cabinet will have 15" sink opening: - 24" / 2 = X
48"W Cabinet will have 21" sink opening: -30" / 2 = X

VANITY SINK W/SIDE DRAWERS 54" & 60" WIDE

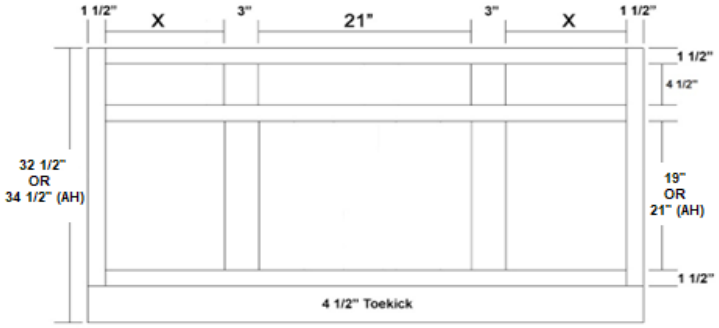

Opening Width Calculation
Cabinet Width: - 30" / 2 = X

VANITY DRAWER BASE

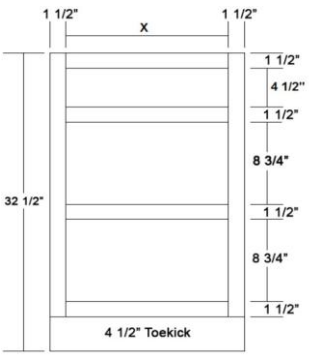

Opening Width Calculation
Cabinet Width - 3" = X

AH VANITY DRAWER BASE

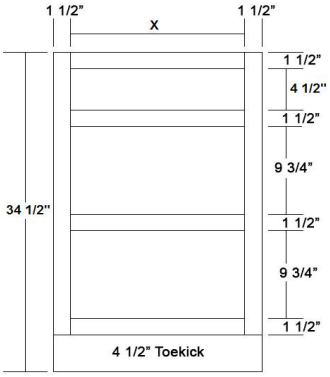

Opening Width Calculation
Cabinet Width - 3" = X

TOE KICK IS RECESSED BACK 3"

Koch Midland

VANITY DIMENSIONS

VANITY BASE W/CENTER DRAWERS

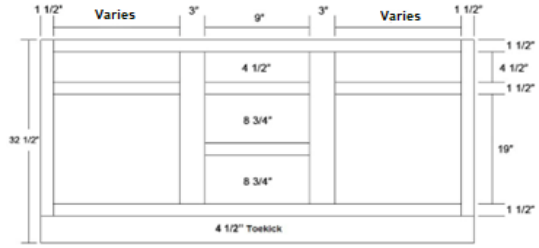

Opening Door Width Calculation
VB54CD-3 - 18"
VB57CD-3 (MIDDLE OPENING WILL BE 12" INSTEAD OF 9") - 18"
VB60CD-3 (MIDDLE OPENING WILL BE 12" INSTEAD OF 9") - 19 1/2"

AH VANITY BASE 54" WIDE W/CENTER DRAWERS

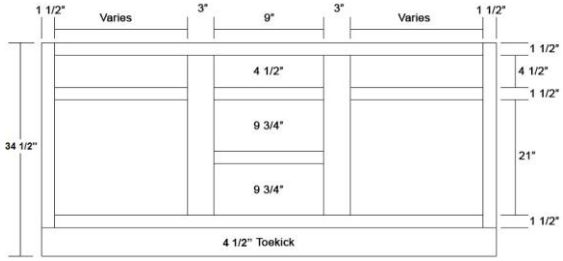

Opening Door Width Calculation
VB54CDAH-3 - 18"

AH VANITY BASE 57" & 60" WIDE W/CENTER DRAWERS

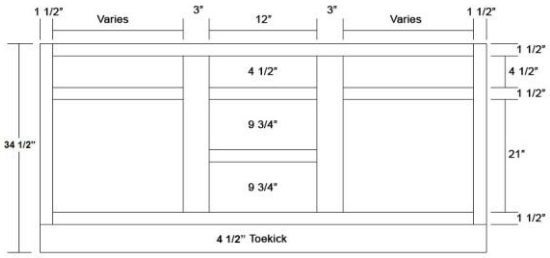

Opening Door Width Calculation
VB57CDAH-3 - 18"
VB60CDAH-3 - 19 1/2"

AH VANITY BASE W/ FULL HEIGHT DOORS (42", 45" & 48 WILL HAVE MULLION)

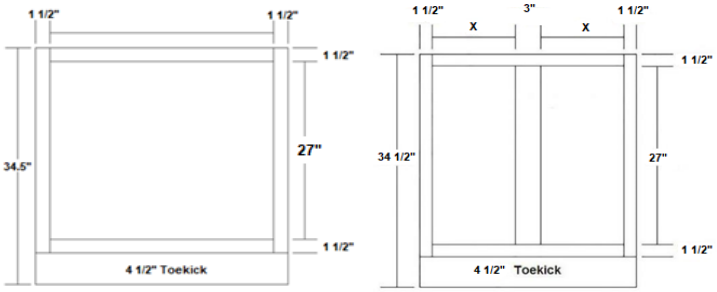

Opening Door Width Calculation

VB33FHDAH-2B - 30"
VB36FHDAH-2B - 33"
VB39FHDAH-2B - 36"

VB42FHDAH - 18"
VB45FHDAH - 19 1/2"
VB48FHDAH - 21"

(Door Opening is Cabinet Width - 6" / 2 = X)

AH VANITY SINK W/TUB DRAWERS 24" THRU 39"

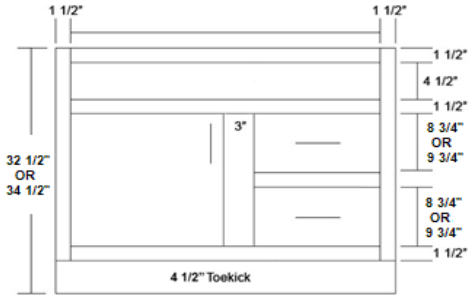

Opening Width Calculation	Door Opening Width	Drawer Opening Width
VB24TDAH-3	9"	9"
VB27TDAH-3	12"	9"
VB30TDAH-3	15"	9"
VB33TDAH-3	18"	9"
VB36TDAH-3	18"	12"
VB39TDAH-3	18"	15"

AH Vanity Sink W/Tub Drawers 42"

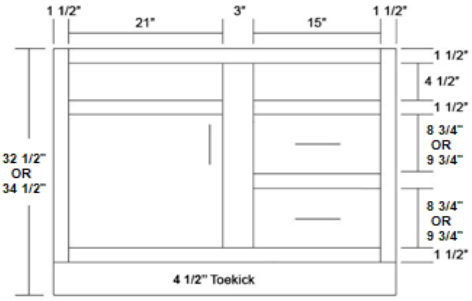

Opening Width Calculation	Door Opening Width	Drawer Opening Width
VB42TDAH-3	21"	15"

TOE KICK IS RECESSED BACK 3"

VANITY CABINETS

VANITY BASE - 32 1/2" & 34 1/2" (AH) HEIGHT

ONE ADJUSTABLE 1/2 DEPTH SHELF - ONE WIDE DRAWER FRONT

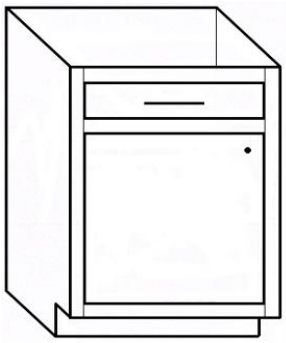

VB12AHL

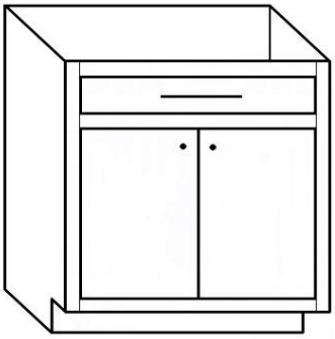

VB27AH-2B

21" DEEP CABINET		Price A	Price B	Price C
VB12L	12" X 32.5"	426	447	468
VB12R	12" X 32.5"	426	447	468
VB15L	15" X 32.5"	442	464	486
VB15R	15" X 32.5"	442	464	486
VB18L	18" X 32.5"	460	483	506
VB18R	18" X 32.5"	460	483	506
VB21L	21" X 32.5"	473	496	520
VB21R	21" X 32.5"	473	496	520
VB24L	24" X 32.5"	489	513	538
VB24R	24" X 32.5"	489	513	538
VB24-2B	24" X 32.5"	531	557	584
VB27-2B	27" X 32.5"	597	627	656
VB30-2B	30" X 32.5"	616	647	678
VB33-2B	33" X 32.5"	629	660	692
VB36-2B	36" X 32.5"	642	674	706

AH 21" DEEP CABINET		Price A	Price B	Price C
VB12AHL	12" X 34.5"	518	544	570
VB12AHR	12" X 34.5"	518	544	570
VB15AHL	15" X 34.5"	535	562	589
VB15AHR	15" X 34.5"	535	562	589
VB18AHL	18" X 34.5"	551	579	606
VB18AHR	18" X 34.5"	551	579	606
VB21AHL	21" X 34.5"	566	594	623
VB21AHR	21" X 34.5"	566	594	623
VB24AHL	24" X 34.5"	582	611	640
VB24AHR	24" X 34.5"	582	611	640
VB24AH-2B	24" X 34.5"	622	653	684
VB27AH-2B	27" X 34.5"	689	723	758
VB30AH-2B	30" X 34.5"	705	740	776
VB33AH-2B	33" X 34.5"	721	757	793
VB36AH-2B	36" X 34.5"	735	772	809

VANITY BASE W/ FULL HEIGHT DOORS - 34 1/2" (AH) HEIGHT

TWO ADJUSTABLE 1/2 DEPTH SHELVES

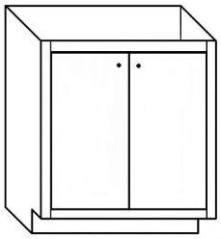

VB33FHDAH-2B

VB42FHDAH

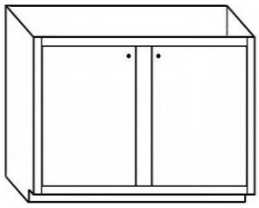

AH 21" DEEP CABINET		Price A	Price B	Price C
VB27FHDAH-2B	27" X 34.5"	665	700	736
VB30FHDAH-2B	30" X 34.5"	685	720	756
VB33FHDAH-2B	33" X 34.5"	705	740	776
VB36FHDAH-2B	36" X 34.5"	725	761	798
VB39FHDAH-2B	39" X 34.5"	745	782	820
VB42FHDAH	42" X 34.5"	780	819	858
VB45FHDAH	45" X 34.5"	790	830	869
VB48FHDAH	48" X 34.5"	800	840	880

VANITY SINK BASE - 32 1/2" & 34 1/2" (AH) HEIGHT

ONE WIDE FALSE FRONT

VSB42, VSB45, VSB48, VSB42AH, VSB45AH AND VSB48AH
WILL HAVE TWO FALSE FRONTS

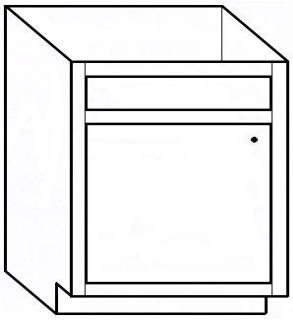

VSB24AHL

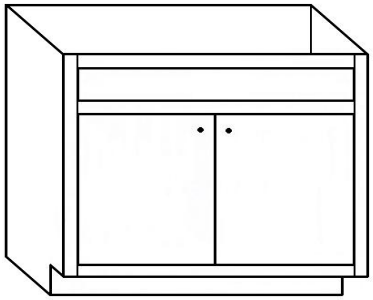

VSB27AH-2B

21" DEEP CABINET		Price A	Price B	Price C
VSB24L	24" X 32.5"	440	462	484
VSB24R	24" X 32.5"	440	462	484
VSB24-2B	24" X 32.5"	481	505	529
VSB27-2B	27" X 32.5"	516	542	568
VSB30-2B	30" X 32.5"	530	557	583
VSB33-2B	33" X 32.5"	544	571	598
VSB36-2B	36" X 32.5"	555	583	610
VSB39-2B	39" X 32.5"	566	594	623
VSB42	42" X 32.5"	577	606	635
VSB45	45" X 32.5"	588	617	647
VSB48	48" X 32.5"	599	629	659

AH 21" DEEP CABINET		Price A	Price B	Price C
VSB24AHL	24" X 34.5"	511	537	562
VSB24AHR	24" X 34.5"	511	537	562
VSB24AH-2B	24" X 34.5"	568	596	625
VSB27AH-2B	27" X 34.5"	580	609	638
VSB30AH-2B	30" X 34.5"	592	622	651
VSB33AH-2B	33" X 34.5"	603	633	663
VSB36AH-2B	36" X 34.5"	621	652	683
VSB39AH-2B	39" X 34.5"	633	664	696
VSB42AH	42" X 34.5"	646	678	710
VSB45AH	45" X 34.5"	659	692	725
VSB48AH	48" X 34.5"	673	706	740

VANITY CABINETS

VANITY DRAWER BASE - 32 1/2" & 34 1/2" (AH) HEIGHT

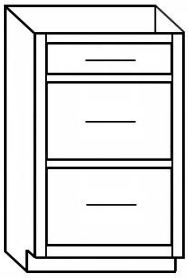

VDB12AH-3

21" DEEP CABINET		Price		
		A	B	C
VDB12-3	12" X 32.5"	482	506	530
VDB15-3	15" X 32.5"	514	540	565
VDB18-3	18" X 32.5"	550	578	605
VDB21-3	21" X 32.5"	584	613	642
VDB24-3	24" X 32.5"	620	651	682
VDB27-3	27" X 32.5"	654	687	719

AH 21" DEEP CABINET		Price		
		A	B	C
VDB12AH-3	12" X 34.5"	583	612	641
VDB15AH-3	15" X 34.5"	616	647	678
VDB18AH-3	18" X 34.5"	651	684	716
VDB21AH-3	21" X 34.5"	686	720	755
VDB24AH-3	24" X 34.5"	721	757	793
VBD27AH-3	27" X 34.5"	755	793	833

VB36SPAH & VB39SPAH-M VANITY SINK W/SIDE DRAWERS - 32 1/2" & 34 1/2" (AH) HEIGHT

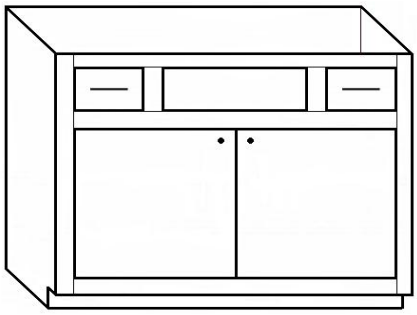

VB36SP-2B

21" DEEP CABINET		Price		
		A	B	C
VB36SP-2B	36" X 32.5"	635	667	699
VB39SP-2B	39" X 32.5"	651	684	716

AH 21" DEEP CABINET		Price		
		A	B	C
VB36SPAH-2B	36" X 34.5"	724	760	796
VB39SPAH-2B	39" X 34.5"	741	778	815

VB42SPAH & VB48SPAH-M VANITY SINK W/SIDE DRAWERS - 32 1/2" & 34 1/2" (AH) HEIGHT

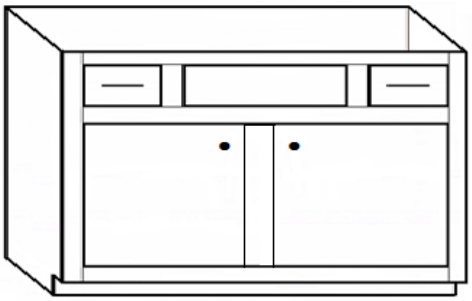

VB42SP

21" DEEP CABINET		Price		
		A	B	C
VB42SP	42" X 32.5"	664	697	730
VB48SP-M	48" X 32.5"	697	732	767

AH 21" DEEP CABINET		Price		
		A	B	C
VB42SPAH	42" X 34.5"	755	793	831
VB48SPAH-M	48" X 34.5"	791	831	870

VB54SPAH & VB60SPAH-M VANITY SINK W/SIDE DRAWERS - 32 1/2" & 34 1/2" (AH) HEIGHT

CENTER DOOR WILL ALWAYS HINGE LEFT

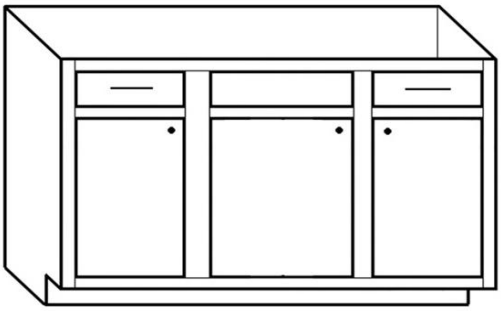

VB54SPAH-M

21" DEEP CABINET		Price		
		A	B	C
VB54SP-M	54" X 32.5"	761	799	837
VB60SP-M	60" X 32.5"	802	842	882

AH 21" DEEP CABINET		Price		
		A	B	C
VB54SPAH-M	54" X 34.5"	854	897	939
VB60SPAH-M	60" X 34.5"	896	941	986

VANITY CABINETS

VANITY BASE W/CENTER STACKED DRAWERS - 32 1/2" & 34 1/2" (AH) HEIGHT

All WORKING CENTER DRAWERS STACK

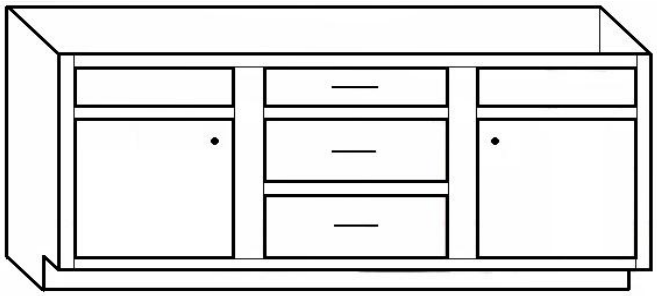

VB54CDAH-3

21" DEEP CABINET		Price		
		A	B	C
VB54CD-3	54" X 32.5"	1005	1055	1105
VB57CD-3	57" X 32.5"	1037	1089	1141
VB60CD-3	60" X 32.5"	1076	1130	1184

AH 21" DEEP CABINET		Price		
		A	B	C
VB54CDAH-3	54" X 34.5"	1098	1153	1208
VB57CDAH-3	57" X 34.5"	1132	1189	1245
VB60CDAH-3	60" X 34.5"	1165	1223	1282

VANITY SINK BASE W/2 WORKING TUB DRAWERS - 32 1/2" & 34 1/2" (AH) HEIGHT

24 THRU 39 WILL HAVE FULL WIDTH FALSE FRONT

TDR = DRAWERS RIGHT & SINGLE DOOR HINGED LEFT
TDL = DRAWERS LEFT & SINGLE DOOR HINGED RIGHT

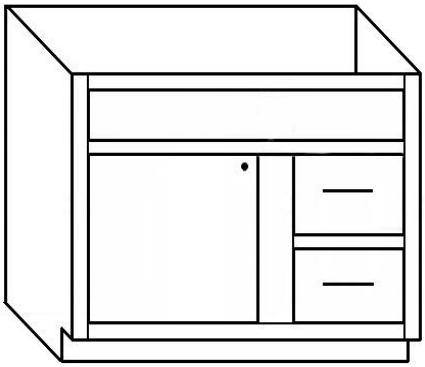

VB24TDRAH-3

VB42 WILL HAVE TWO FALSE FRONTS
MOD FOR WORKING TOP DRAWER FOR VB42 IS ON PAGE 51

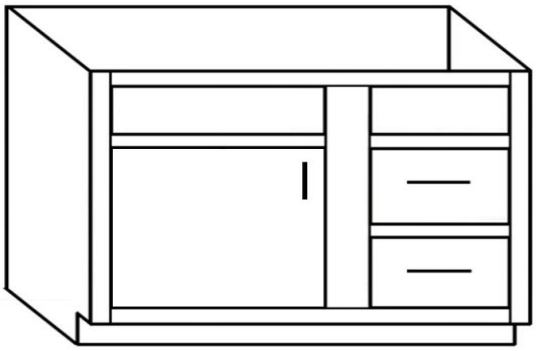

VB42TDRAH-3-M

21" DEEP CABINET		Price		
		A	B	C
VB24TDL-3	24" X 32.5"	665	698	731
VB24TDR-3	24" X 32.5"	665	698	731
VB27TDL-3	27" X 32.5"	681	715	749
VB27TDR-3	27" X 32.5"	681	715	749
VB30TDL-3-M	30" X 32.5"	719	755	791
VB30TDR-3-M	30" X 32.5"	719	755	791
VB33TDL-3-M	33" X 32.5"	747	784	821
VB33TDR-3-M	33" X 32.5"	747	784	821
VB36TDL-3-M	36" X 32.5"	802	842	882
VB36TDR-3-M	36" X 32.5"	802	842	882
VB39TDL-3-M	39" X 32.5"	829	870	912
VB39TDR-3-M	39" X 32.5"	829	870	912
VB42TDL-3-M	42" X 32.5"	844	886	928
VB42TDR-3-M	42" X 32.5"	844	886	928

AH 21" DEEP CABINET		Price		
		A	B	C
VB24TDLAH-3	24" X 34.5"	758	796	834
VB24TDRAH-3	24" X 34.5"	758	796	834
VB27TDLAH-3	27" X 34.5"	774	813	851
VB27TDRAH-3	27" X 34.5"	774	813	851
VB30TDLAH-3-M	30" X 34.5"	813	854	894
VB30TDRAH-3-M	30" X 34.5"	813	854	894
VB33TDLAH-3-M	33" X 34.5"	840	882	924
VB33TDRAH-3-M	33" X 34.5"	840	882	924
VB36TDLAH-3-M	36" X 34.5"	868	911	955
VB36TDRAH-3-M	36" X 34.5"	868	911	955
VB39TDLAH-3-M	39" X 34.5"	895	940	985
VB39TDRAH-3-M	39" X 34.5"	895	940	985
VB42TDLAH-3-M	42" X 34.5"	1086	1140	1195
VB42TDRAH-3-M	42" X 34.5"	1086	1140	1195

VANITY CABINETS

23" TALL HANDICAP WALL MOUNT ADA BASE SINK AND VANITY SINK

6 WEEK LEAD TIME

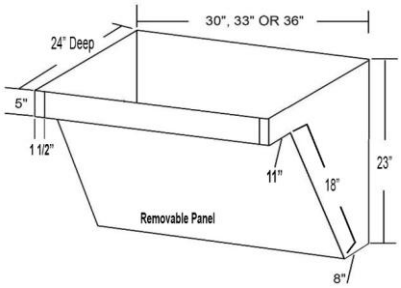

BS-HC30-M

VSB-HC30

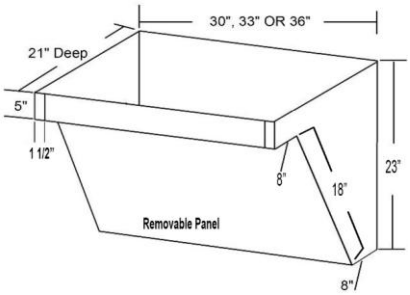

REMOVABLE PANEL, WITH MATCHING PRINTED FRONT, FOR ACCESS TO PLUMBNG

21" DEEP CABINET		Price A
VSB-HC30		891
VSB-HC33		932
VSB-HC36		972

24" DEEP CABINET		Price A
BS-HC30-M		891
BS-HC33-M		932
BS-HC36-M		972

32 1/2" TALL CABINET WITH HANDICAP WALL MOUNT ADA SINK BASE

6 WEEK LEAD TIME

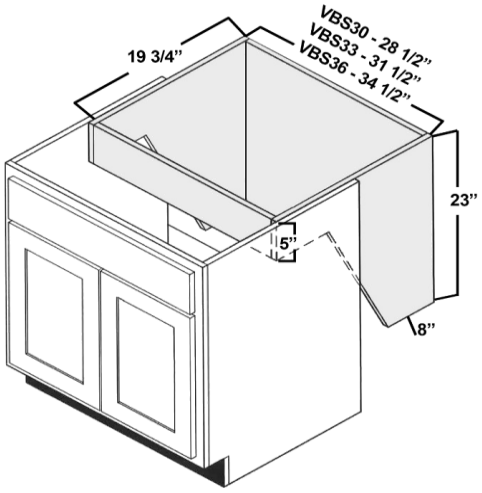

VSB-HC30-COMBO-M

BS-HC30-COMBO-M

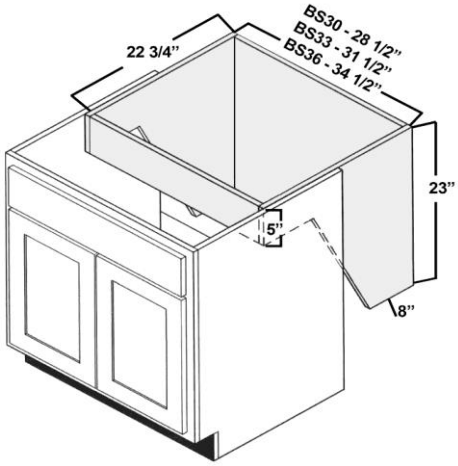

REMOVABLE PANEL ON SINK, WITH MATCHING PRINTED FRONT, FOR ACCESS TO PLUMBNG
SHIPS AS TWO SEPARATE CABINETS

21" DEEP CABINET		Price A	Price B	Price C
VSB-HC30-COMBO-M		2425	2546	2668
VSB-HC33-COMBO-M		2450	2573	2695
VSB-HC36-COMBO-M		2475	2599	2723

24" DEEP CABINET		Price A	Price B	Price C
BS-HC30-COMBO-M		2425	2546	2668
BS-HC33-COMBO-M		2450	2573	2695
BS-HC36-COMBO-M		2475	2599	2723

VANITY CABINETS

5" TALL OFFICE DESK WITH DRAWER

3" STILES - TRIMMABLE UP TO 1 1/2" ON EACH SIDE
DRAWER BOX IS 2 1/2" TALL
TOP RAIL IS 1 1/2" TALL

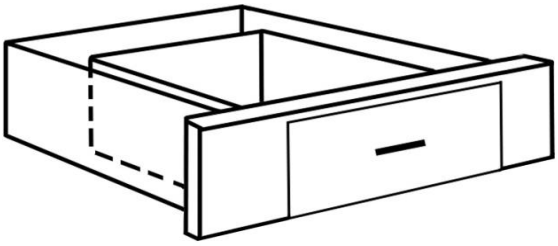

21" DEEP CABINET		Price A	Price B	Price C
VDK27-30		302	317	332
VDK30-33		317	333	349

9" DEEP TOILET TOPPER

INCLUDES TWO SHELVES

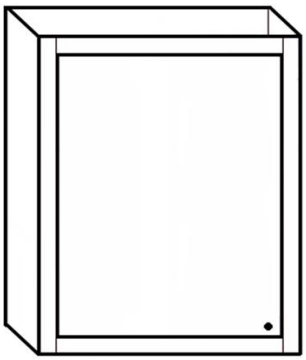

W2430TTU9L

9" DEEP CABINET		Price A	Price B	Price C
W2430TTU9L		252	265	277
W2430TTU9R		252	265	277

NOTES OR ADDITIONS

Koch Midland

TALL CABINET DIMENSIONS

SINGLE OVEN CABINET

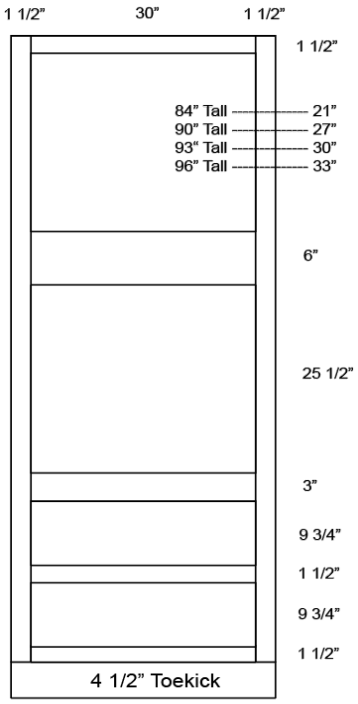

Opening Calculation
Cabinet Width 33"
(M-OCS3384-2B, M-OCS3390-2B, M-OCS3393-2B AND M-OCS3396-2B)

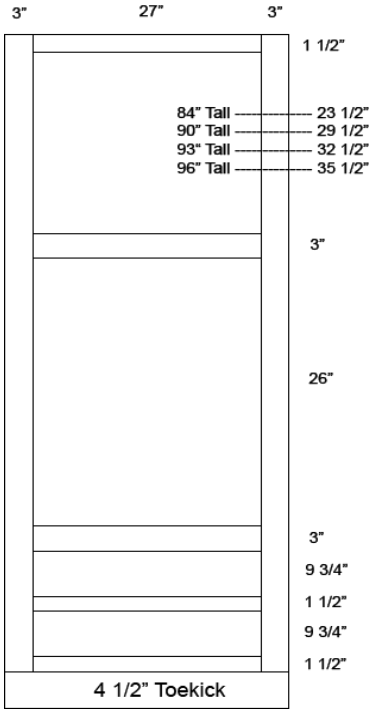

Opening Calculation
Cabinet Width 33"
(M3-OCS3384-2B, M3-OCS3390-2B, M3-OCS3393-2B AND M3-OCS3396-2B)

DOUBLE OVEN CABINET

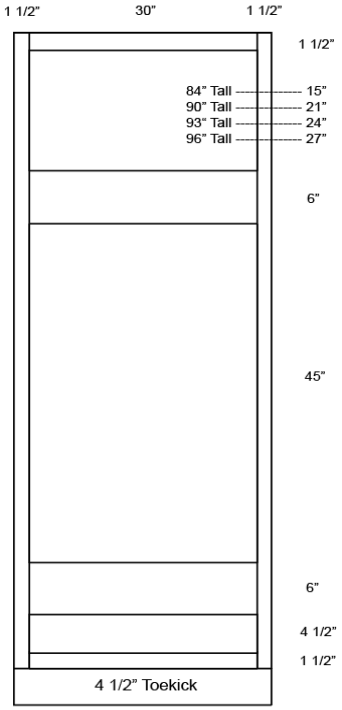

Opening Calculation
Cabinet Width 33"
(M-OCDS3384-2B, M-OCDS3390-2B, M-OCDS3393-2B
AND M-OCDS3396-2B)
Floor will be at bottom of lower rail to allow for cut out.
If no cut out is needed floor will need to be blocked up.

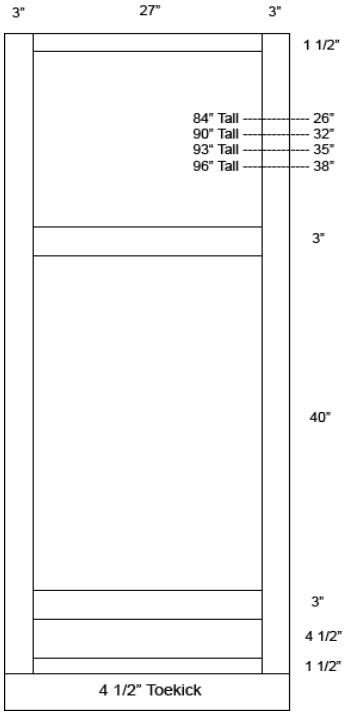

Opening Calculation
Cabinet Width 33"
(M3-OCDS3384-2B, M3-OCDS3390-2B, M3-OCDS3393-2B
AND M3-OCDS3396-2B)
Floor will be at bottom of lower rail to allow for cut out.
If no cut out is needed floor will need to be blocked up.

Koch Midland

TALL CABINET DIMENSIONS

MICROWAVE AND SINGLE OVEN CABINET

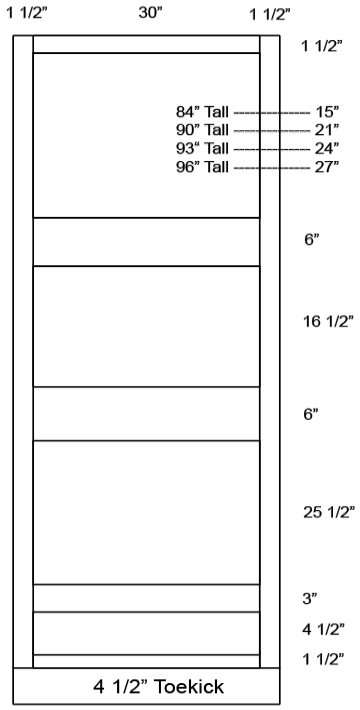

Opening Calculation
Cabinet Width 33"
(M-OCS3384MW-2B,
M-OCS3390MW-2B,
M-OCS3393MW-2B
AND M-OCS3396MW-2B)

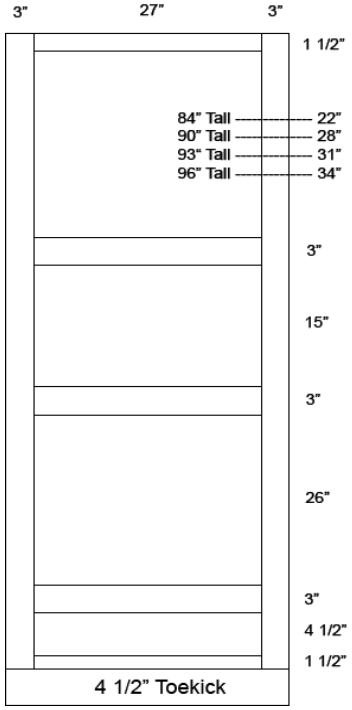

Opening Calculation
Cabinet Width 33"
(M3-OCS3384MW-2B,
M3-OCS3390MW-2B,
M3-OCS3393MW-2B
AND M3-OCS3396MW-2B)

PANTRY AND LINEN CABINET

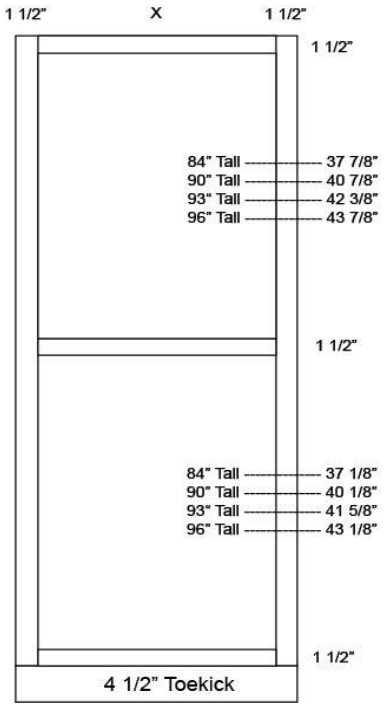

Opening Calculation
Cabinet Width - 3" = X

84" WALK THROUGH PANTRY

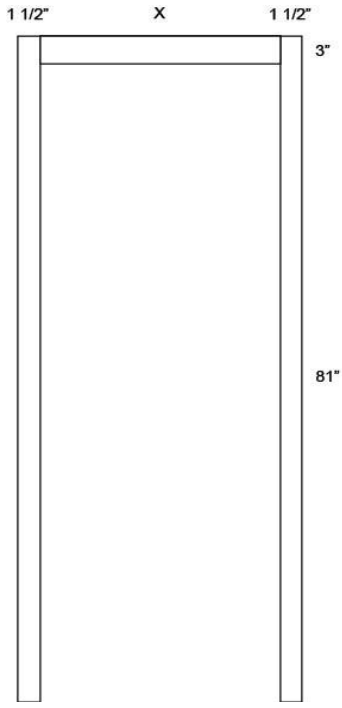

Opening Calculation
Cabinet Width - 3" = X

90", 93" & 96" WALK THROUGH PANTRY

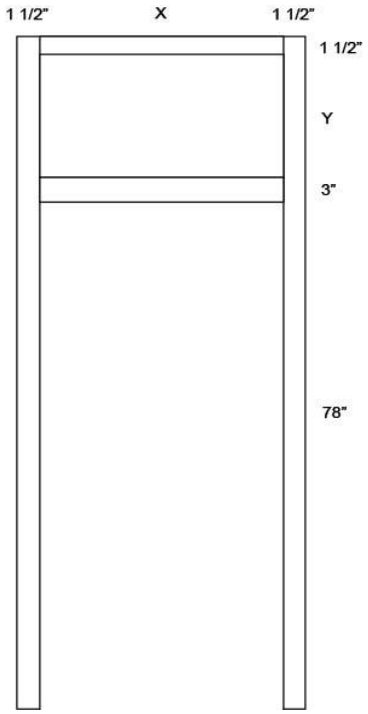

Opening Calculation
Cabinet Width - 3" = X
Cabinet Height - 82 1/2" = Y

PANTRY FRONT

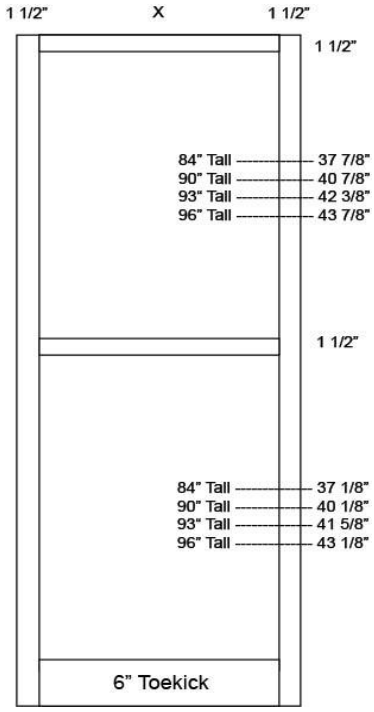

Opening Calculation
Cabinet Width - 3" = X

TALL CABINET DIMENSIONS

PANTRY BROOM CLOSET

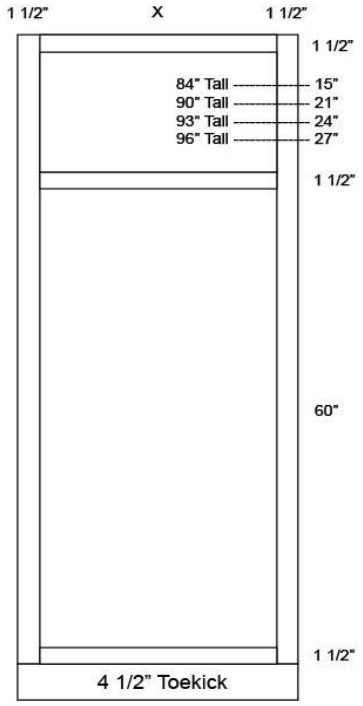

Opening Calculation
Cabinet Width - 3" = X

Tall Cabinets

TALL SINGLE OVEN CABINET

NO SHELF IN 84" - ONE ADJUSTABLE SHELF IN 90", 93" & TWO ADJUSTABLE SHELVES IN 96"
NO CUSTOM CUT OUTS & EXTENDED STILES N/A
M3 MEANS 3" STILES

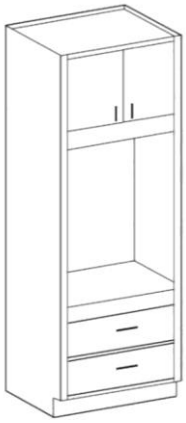

24" DEEP CABINET		Price		
		A	B	C
M-OCS3384-2B	33" X 84"	1386	1455	1525
M-OCS3390-2B	33" X 90"	1473	1547	1620
M-OCS3393-2B	33" X 93"	1523	1597	1670
M-OCS3396-2B	33" X 96"	1577	1656	1735
M3-OCS3384-2B	33" X 84"	1386	1455	1525
M3-OCS3390-2B	33" X 90"	1473	1547	1620
M3-OCS3393-2B	33" X 93"	1523	1597	1670
M3-OCS3396-2B	33" X 96"	1577	1656	1735

TALL DOUBLE OVEN CABINET

NO SHELF IN 84" - ONE ADJUSTABLE SHELF IN 90", 93" & TWO ADJUSTABLE SHELVES IN 96"
NO CUSTOM CUT OUTS & EXTENDED STILES N/A
M3 MEANS 3" STILES

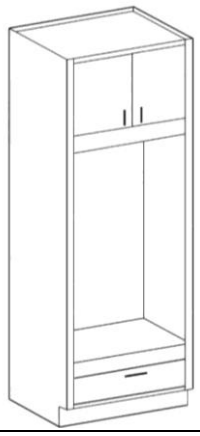

24" DEEP CABINET		Price		
		A	B	C
M-OCDS3384-2B	33" X 84"	1304	1369	1434
M-OCDS3390-2B	33" X 90"	1391	1461	1530
M-OCDS3393-2B	33" X 93"	1441	1511	1590
M-OCDS3396-2B	33" X 96"	1495	1570	1645
M3-OCDS3384-2B	33" X 84"	1304	1369	1434
M3-OCDS3390-2B	33" X 90"	1391	1461	1530
M3-OCDS3393-2B	33" X 93"	1441	1511	1590
M3-OCDS3396-2B	33" X 96"	1495	1570	1645

TALL SINGLE OVEN CABINET W/ MICROWAVE

NO SHELF IN 84" - ONE ADJUSTABLE SHELF IN 90", 93" & TWO ADJUSTABLE SHELVES IN 96"
NO CUSTOM CUT OUTS - MW SECTION WILL HAVE MAPLE PRINTED INTERIOR
EXTENDED STILES N/A
M3 MEANS 3" STILES

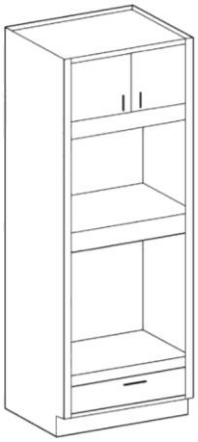

24" DEEP CABINET		Price		
		A	B	C
M-OCS3384MW-2B	33" X 84"	1566	1644	1723
M-OCS3390MW-2B	33" X 90"	1652	1735	1817
M-OCS3393MW-2B	33" X 93"	1702	1788	1877
M-OCS3396MW-2B	33" X 96"	1755	1843	1931
M3-OCS3384MW-2B	33" X 84"	1566	1644	1723
M3-OCS3390MW-2B	33" X 90"	1652	1735	1817
M3-OCS3393MW-2B	33" X 93"	1702	1788	1877
M3-OCS3396MW-2B	33" X 96"	1755	1843	1931

Tall Cabinets

84", 90", 93" & 96" TALL PANTRY CABINET

PANTRIES WILL HAVE EQUAL HEIGHT DOORS
84", 90" & 93" HAVE 2 ADJUSTABLE FULL DEPTH SHELVES IN EACH SECTION
96" 3 HAS ADJUSTABLE FULL DEPTH SHELVES IN EACH SECTION

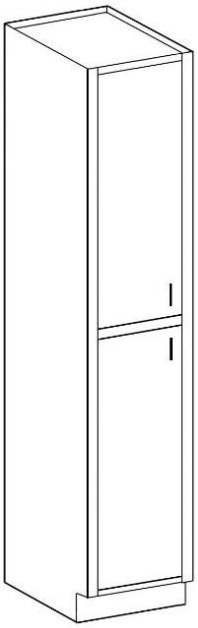

24" DEEP CABINET		Price		
		A	B	C
PE1584U24L	15" X 84"	676	710	744
PE1584U24R	15" X 84"	676	710	744
PE1884U24L	18" X 84"	881	925	969
PE1884U24R	18" X 84"	881	925	969
PE2484U24L	24" X 84"	1047	1099	1152
PE2484U24R	24" X 84"	1047	1099	1152
PE3084U24-4B	30" X 84"	1367	1435	1504
PE3684U24-4B	36" X 84"	1713	1766	1850
PE1590U24L	15" X 90"	794	834	873
PE1590U24R	15" X 90"	794	834	873
PE1890U24L	18" X 90"	999	1049	1099
PE1890U24R	18" X 90"	999	1049	1099
PE2490U24L	24" X 90"	1164	1222	1280
PE2490U24R	24" X 90"	1164	1222	1280
PE3090U24-4B	30" X 90"	1487	1561	1636
PE3690U24-4B	36" X 90"	1810	1891	1966
PE1593U24L	15" X 93"	857	897	923
PE1593U24R	15" X 93"	857	897	923
PE1893U24L	18" X 93"	1062	1102	1128
PE1893U24R	18" X 93"	1062	1102	1128
PE2493U24L	24" X 93"	1227	1267	1293
PE2493U24R	24" X 93"	1227	1267	1293
PE3093U24-4B	30" X 93"	1550	1590	1616
PE3693U24-4B	36" X 93"	1880	1920	1939
PE1596U24L	15" X 96"	920	966	1012
PE1596U24R	15" X 96"	920	966	1012
PE1896U24L	18" X 96"	1128	1184	1241
PE1896U24R	18" X 96"	1128	1184	1241
PE2496U24L	24" X 96"	1293	1358	1422
PE2496U24R	24" X 96"	1293	1358	1422
PE3096U24-4B	30" X 96"	1587	1666	1746
PE3696U24-4B	36" X 96"	1917	1996	2076

Tall Cabinets

84", 90", 93" & 96" TALL PANTRY CABINET W/3 ADJUSTABLE ROLLOUTS

PANTRIES WILL HAVE EQUAL HEIGHT DOORS W/ 3 ROLLOUTS IN BOTTOM HALF
2 FULL DEPTH SHELVES IN TOP OF 84", 90" & 93" / 3 SHELVES IN 96"
1/2" RABBETED SOLID WOOD DRAWER BOX - 3 1/2" TALL
DRAWER BOX, ROLLOUTS AND TRACK WILL MATCH PER ORDER.
DRAWER BOX/TRACK SELECTION UPCHARGES WILL APPLY.

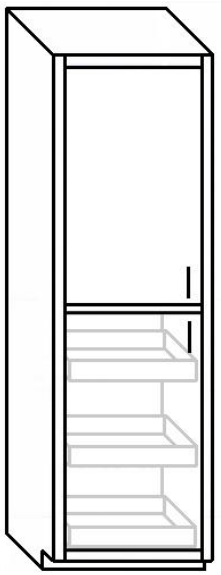

TO PROTECT THE DOOR FROM SCRATCHES, BUMPERS WILL BE INSTALLED ON THE ROLLOUT SIDE THAT IS AGAINST THE DOOR. THIS WILL BE ON ALL STANDARD OVERLAY ROLLOUTS AND ON MODIFIED FULL OVERLAY ROLLOUTS WHERE SPACE ALLOWS.

24" DEEP CABINET		Price		
		A	B	C
PE1584U24-3RL	15" X 84"	1470	1544	1617
PE1584U24-3RR	15" X 84"	1470	1544	1617
PE1884U24-3RL	18" X 84"	1675	1759	1843
PE1884U24-3RR	18" X 84"	1675	1759	1843
PE2484U24-3RL	24" X 84"	1840	1932	2024
PE2484U24-3RR	24" X 84"	1840	1932	2024
PE3084U24-3R-4B	30" X 84"	2170	2279	2387
PE3684U24-3R-4B	36" X 84"	2500	2626	2733
PE1590U24-3RL	15" X 90"	1588	1667	1747
PE1590U24-3RR	15" X 90"	1588	1667	1747
PE1890U24-3RL	18" X 90"	1793	1883	1972
PE1890U24-3RR	18" X 90"	1793	1883	1972
PE2490U24-3RL	24" X 90"	1958	2056	2154
PE2490U24-3RR	24" X 90"	1958	2056	2154
PE3090U24-3R-4B	30" X 90"	2268	2381	2495
PE3690U24-3R-4B	36" X 90"	2598	3727	2825
PE1593U24-3RL	15" X 93"	1651	1740	1810
PE1593U24-3RR	15" X 93"	1651	1740	1810
PE1893U24-3RL	18" X 93"	1857	1946	2016
PE1893U24-3RR	18" X 93"	1857	1946	2016
PE2493U24-3RL	24" X 93"	2022	2111	2181
PE2493U24-3RR	24" X 93"	2022	2111	2181
PE3093U24-3R-4B	30" X 93"	2332	2421	2491
PE3693U24-3R-4B	36" X 93"	2662	2767	2821
PE1596U24-3RL	15" X 96"	1714	1800	1885
PE1596U24-3RR	15" X 96"	1714	1800	1885
PE1896U24-3RL	18" X 96"	1921	2017	2113
PE1896U24-3RR	18" X 96"	1921	2017	2113
PE2496U24-3RL	24" X 96"	2087	2191	2296
PE2496U24-3RR	24" X 96"	2087	2191	2296
PE3096U24-3R-4B	30" X 96"	2387	2506	2626
PE3696U24-3R-4B	36" X 96"	2717	2852	2972

Tall Cabinets

84", 90", 93" & 96" TALL PANTRY LINEN CABINET

84" & 90" HAS TWO ADJUSTABLE FULL DEPTH SHELVES IN EACH SECTION
93" & 96" HAS THREE ADJUSTABLE SHELVES IN EACH SECTION

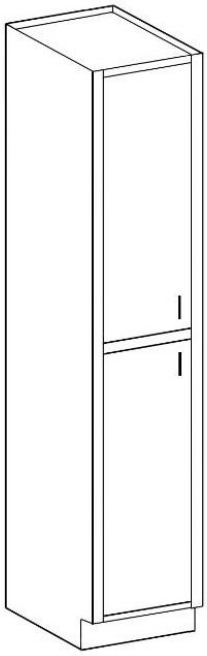

21" DEEP CABINET		Price		
		A	B	C
PLE1584U21L	15" W X 84" T	939	986	1033
PLE1584U21R	15" W X 84" T	939	986	1033
PLE1884U21L	18" W X 84" T	974	1022	1073
PLE1884U21R	18" W X 84" T	974	1022	1073
PLE2184U21L	21" W X 84" T	1008	1059	1112
PLE2184U21R	21" W X 84" T	1008	1059	1112
PLE2484U21L	24" W X 84" T	1103	1158	1216
PLE2484U21R	24" W X 84" T	1103	1158	1216
PLE2784U21-4B	27" W X 84" T	1290	1355	1423
PLE3084U21-4B	30" W X 84" T	1361	1429	1501
PLE1590U21L	15" W X 90" T	1164	1211	1238
PLE1590U21R	15" W X 90" T	1164	1211	1238
PLE1890U21L	18" W X 90" T	1204	1251	1278
PLE1890U21R	18" W X 90" T	1204	1251	1278
PLE2190U21L	21" W X 90" T	1246	1293	1320
PLE2190U21R	21" W X 90" T	1246	1293	1320
PLE2490U21L	24" W X 90" T	1355	1402	1429
PLE2490U21R	24" W X 90" T	1355	1402	1429
PLE2790U21-4B	27" W X 90" T	1574	1621	1648
PLE3090U21-4B	30" W X 90" T	1656	1703	1730
PLE1593U21L	15" W X 93" T	1205	1252	1279
PLE1593U21R	15" W X 93" T	1205	1252	1279
PLE1893U21L	18" W X 93" T	1245	1292	1319
PLE1893U21R	18" W X 93" T	1245	1292	1319
PLE2193U21L	21" W X 93" T	1287	1334	1361
PLE2193U21R	21" W X 93" T	1287	1334	1361
PLE2493U21L	24" W X 93" T	1396	1443	1470
PLE2493U21R	24" W X 93" T	1396	1443	1470
PLE2793U21-4B	27" W X 93" T	1615	1662	1689
PLE3093U21-4B	30" W X 93" T	1697	1744	1771
PLE1596U21L	15" W X 96" T	1246	1293	1320
PLE1596U21R	15" W X 96" T	1246	1293	1320
PLE1896U21L	18" W X 96" T	1286	1333	1360
PLE1896U21R	18" W X 96" T	1286	1333	1360
PLE2196U21L	21" W X 96" T	1328	1375	1402
PLE2196U21R	21" W X 96" T	1328	1375	1402
PLE2496U21L	24" W X 96" T	1437	1484	1511
PLE2496U21R	24" W X 96" T	1437	1484	1511
PLE2796U21-4B	27" W X 96" T	1656	1703	1730
PLE3096U21-4B	30" W X 96" T	1739	1786	1813

Tall Cabinets

84", 90", 93" & 96" TALL PANTRY BROOM CLOSET

NO TOP SHELF IN 84" TALL / ONE SHELF IN TOP OF 90" & 93"
TWO SHELVES IN TOP OF 96"
NO SHELVES IN LOWER SECTION
TOP DOORS WILL MATCH STYLE USED ON WALL CABINETS

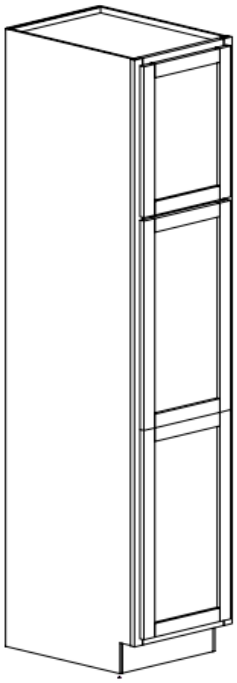

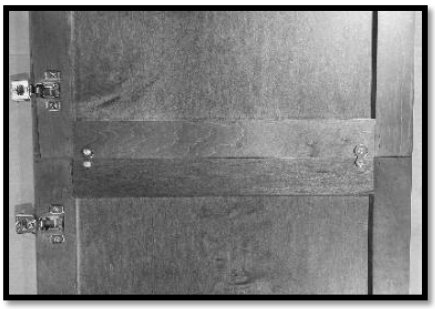

DOORS WILL BE TWO
DOORS ATTACHED TOGETHER WITH
BRACKETS ON THE BACK SIDE.

THIS WILL FUNCTION AS ONE DOOR

24" DEEP CABINET		Price		
		A	B	C
PBCM1584U24L	15" W X 84" T	676	710	744
PBCM1584U24R	15" W X 84" T	676	710	744
PBCM1884U24L	18" W X 84" T	881	925	969
PBCM1884U24R	18" W X 84" T	881	925	969
PBCM1590U24L	15" W X 90" T	794	834	873
PBCM1590U24R	15" W X 90" T	794	834	873
PBCM1890U24L	18" W X 90" T	999	1049	1099
PBCM1890U24R	18" W X 90" T	999	1049	1099
PBCM1593U24L	15" W X 93" T	857	897	923
PBCM1593U24R	15" W X 93" T	857	897	923
PBCM1893U24L	18" W X 93" T	1062	1102	1128
PBCM1893U24R	18" W X 93" T	1062	1102	1128
PBCM1596U24L	15" W X 96" T	920	966	1012
PBCM1596U24R	15" W X 96" T	920	966	1012
PBCM1896U24L	18" W X 96" T	1128	1184	1241
PBCM1896U24R	18" W X 96" T	1128	1184	1241

Tall Cabinets

84", 90" & 96" TALL PANTRY FRONT

1 1/2" DADOED STILES & RAILS
6" FLUSH TOE KICK

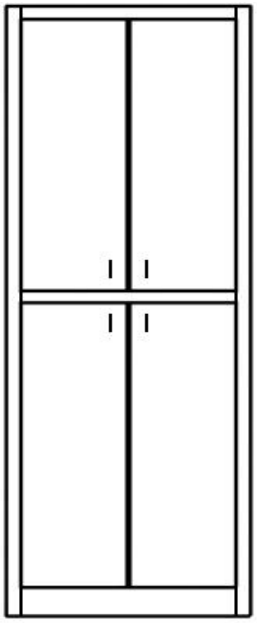

PF3090-4B

84" TALL PANTRY FRONT

FACE FRAMES AND DOORS ONLY	PRICE A	PRICE B	PRICE C
MPF3084-4B	669	703	738
MPF3384-4B	710	746	784
MPF3684-4B	753	791	831

90" TALL PANTRY FRONT

FACE FRAMES AND DOORS ONLY	PRICE A	PRICE B	PRICE C
MPF3090-4B	763	802	842
MPF3390-4B	805	846	889
MPF3690-4B	847	890	935

93" TALL PANTRY FRONT

FACE FRAMES AND DOORS ONLY	PRICE A	PRICE B	PRICE C
MPF3093-4B	851	891	923
MPF3393-4B	893	936	970
MPF3693-4B	935	963	1033

96" TALL PANTRY FRONT

FACE FRAMES AND DOORS ONLY	PRICE A	PRICE B	PRICE C
MPF3096-4B	866	909	955
MPF3396-4B	908	954	1002
MPF3696-4B	950	998	1048

84", 90" & 96" TALL WALK THROUGH PANTRY FRONT

NO BOTTOM RAIL / DOES NOT COME WITH A BOX

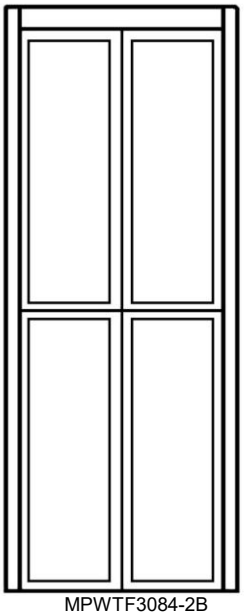

MPWTF3084-2B

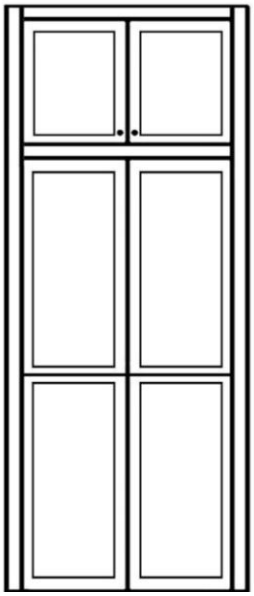

MPWTF3090-4B, MPWTF3093-4B & MPWTF3096-4B

DOORS WILL BE TWO DOORS ATTACHED TOGETHER WITH BRACKETS ON THE BACK SIDE.

THIS WILL FUNCTION AS ONE DOOR

CABINET	PRICE A	PRICE B	PRICE C
MPWTF3084-2B	738	775	814
MPWTF3384-2B	780	819	860
MPWTF3684-2B	823	864	905
MPWTF3090-4B	832	874	918
MPWTF3390-4B	873	917	963
MPWTF3690-4B	916	962	1010
MPWTF3093-4B	884	926	978
MPWTF3393-4B	925	977	1029
MPWTF3693-4B	968	1020	1072
MPWTF3096-4B	936	983	1032
MPWTF3396-4B	977	1026	1077
MPWTF3696-4B	1020	1071	1125

NOTES OR ADDITIONS

Panels

BASE END PANEL WITH 1 1/2" STILE

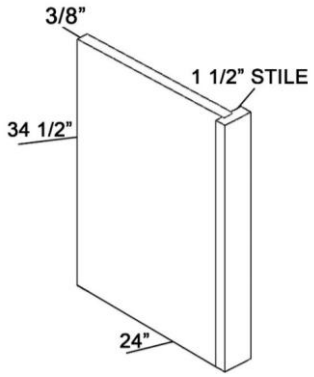

BASE END PANEL WITH 3" STILE

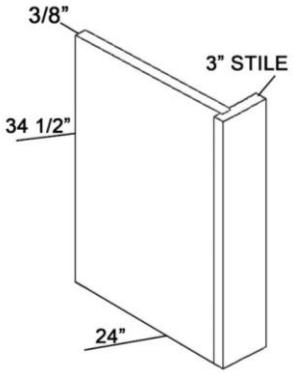

END PANELS WILL HAVE A MATCHING PRINT EXTERIOR (IF PRINT IS AVAILABLE)
AND A MAPLE PRINT INTERIOR.
ADD FINISHED END FOR SKIN IF NEEDED, OR IF PRINT IS NOT AVAILABLE.
EVERGREEN FOG, GRAPHITE, NAVAL & SLATE BLUE ARE NOT AVAILABLE AS PRINTED.
CLEAR SPECIES MAY BE USED WHEN ORDERING RUSTIC SPECIES FOR CABINETS.

REFRIGERATOR END PANEL - 3/4"

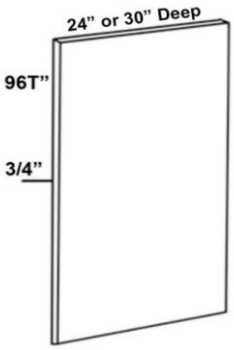

MATCHING PRINTED MATERIAL ON BOTH SIDES.
IF PRINT IS NOT AVAILABLE, PANEL WILL BE FINISHED ON BOTH SIDES.
CLEAR SPECIES MAY BE USED WHEN ORDERING RUSTIC SPECIES FOR CABINETS.

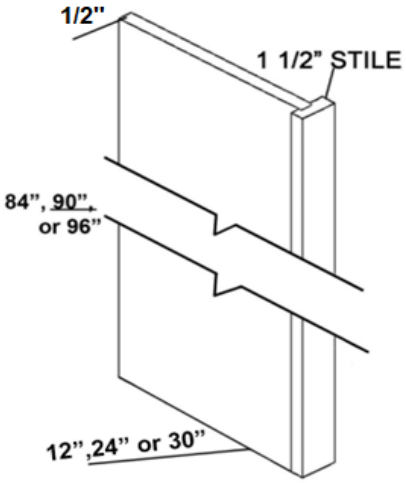

END PANELS WILL HAVE A MATCHING PRINT EXTERIOR (IF PRINT IS AVAILABLE)
AND A MAPLE PRINT INTERIOR.
ADD FINISHED END SKIN IF NEEDED, OR IF PRINT IS NOT AVAILABLE.
EVERGREEN FOG, GRAPHITE, NAVAL & SLATE BLUE ARE NOT AVAILABLE AS PRINTED.
CLEAR SPECIES MAY BE USED WHEN ORDERING RUSTIC SPECIES FOR CABINETS.
HEARTLAND REFRIGERATOR END PANEL ONLY AVAILABLE IN ARCTIC PRINT.
ADD FINISHED END SKIN IF NEEDED FOR ALL OTHER PAINTS.

END PANELS		Price A	
BEP-1 1/2L	24" X 34 1/2"	101	EA
BEP-1 1/2R	24" X 34 1/2"	101	EA
BEP-3L	24" X 34 1/2"	119	EA
BEP-3R	24" X 34 1/2"	119	EA
FREPU2496-3/4	24" X 96"	243	EA
FREPU3096-3/4	30" X 96"	486	EA
REPU1284-1 1/2L	12" X 84"	324	EA
REPU1284-1 1/2R	12" X 84"	324	EA
REPU1290-1 1/2L	12" X 90"	324	EA
REPU1290-1 1/2R	12" X 90"	324	EA
REPU1293-1 1/2L	12" X 93"	324	EA
REPU1293-1 1/2R	12" X 93"	324	EA
REPU1296-1 1/2L	12" X 96"	324	EA
REPU1296-1 1/2R	12" X 96"	324	EA
REPU2484-1 1/2L	24" X 84"	540	EA
REPU2484-1 1/2R	24" X 84"	540	EA
REPU2490-1 1/2L	24" X 90"	540	EA
REPU2490-1 1/2R	24" X 90"	540	EA
REPU2493-1 1/2L	24" X 93"	540	EA
REPU2493-1 1/2R	24" X 93"	540	EA
REPU2496-1 1/2L	24" X 96"	540	EA
REPU2496-1 1/2R	24" X 96"	540	EA
REPU3084-1 1/2L	30" X 84"	636	EA
REPU3084-1 1/2R	30" X 84"	636	EA
REPU3090-1 1/2L	30" X 90"	636	EA
REPU3090-1 1/2R	30" X 90"	636	EA
REPU3093-1 1/2L	30" X 93"	636	EA
REPU3093-1 1/2R	30" X 93"	636	EA
REPU3096-1 1/2L	30" X 96"	636	EA
REPU3096-1 1/2R	30" X 96"	636	EA

Panels

1/4" FINISHED END SKINS - FACTORY INSTALLED

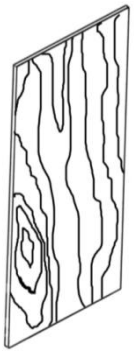

CLEAR SPECIES MAY BE USED WHEN ORDERING RUSTIC SPECIES FOR CABINETS

ATTATCHED SKIN FOR BASE, WALL, VANITY, & TALL CABINETS		Price A	
FINISH END L		21	SF
FINISH END R		21	SF

ATTATCHED SKIN FOR DIAGONAL WALL CABINETS		Price A	
FINISH WD END L		21	SF
FINISH WD END R		21	SF

1/4" FINISHED END SKINS - SENT LOOSE

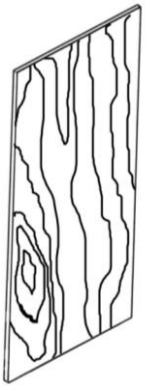

CLEAR SPECIES MAY BE USED WHEN ORDERING RUSTIC SPECIES FOR CABINETS

LOOSE END SKINS		Price A	
FINISH END-W12	11 1/4" X 12"	21	EA
FINISH END-W15	11 1/4" X 15"	26	EA
FINISH END-W18	11 1/4" X 18"	31	EA
FINISH END-W21	11 1/4" X 21"	36	EA
FINISH END-W24	11 1/4" X 24"	42	EA
FINISH END-W27	11 1/4" X 27"	47	EA
FINISH END-W30	11 1/4" X 30"	52	EA
FINISH END-W36	11 1/4" X 36"	63	EA
FINISH END-W42	11 1/4" X 42"	74	EA
FINISH END-W12U15	14 1/4" X 12"	26	EA
FINISH END-W15U15	14 1/4" X 15"	31	EA
FINISH END-W18U15	14 1/4" X 18"	36	EA
FINISH END-W21U15	14 1/4" X 21"	46	EA
FINISH END-W24U15	14 1/4" X 24"	53	EA
FINISH END-W30U15	14 1/4" X 30"	65	EA
FINISH END-W36U15	14 1/4" X 36"	78	EA
FINISH END-W42U15	14 1/4" X 42"	92	EA
FINISH END-W30U21	20 1/4" X 30"	91	EA
FINISH END-W36U21	20 1/4" X 36"	110	EA
FINISH END-W42U21	20 1/4" X 42"	128	EA
FINISH END-W12U24	23 1/4" X 12"	42	EA
FINISH END-W15U24	23 1/4" X 15"	53	EA
FINISH END-W18U24	23 1/4" X 18"	63	EA
FINISH END-W24U24	23 1/4" X 24"	84	EA
FINISH END-B34.5	23 1/4" X 34.5"	121	EA
FINISH END-PLE96	20 1/4" X 96"	336	EA
FINISH END-PE96	23 1/4" X 96"	386	EA
FINISH END-REP96	29 1/4" X 96"	432	EA

1/4" AND 1/2" BACK PANEL

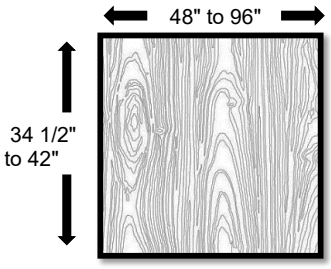

FBBS - 48" X 34 1/2"'
STAIN GRADE 1/4" BBS IS MAPLE VENEER
WITH AN MDF CORE. PAINT GRADE IS MDF.

1/2" BBS IS PARTICLE BOARD. IT WILL HAVE MATCHING PRINT ON ONE
SIDE AND MAPLE PRINT ON ONE SIDE.
*NOT AVAILABLE IN EVERGREEN FOG, GRAPHITE, NAVAL OR SLATE BLUE.

BACK PANEL		Price A	
1/4 FBBS-34 1/2	1/4" X 48" X 34 1/2"	169	EA
1/2 BBS-34 1/2	1/2" X 48" X 34 1/2"	81	EA
1/4 FBBS-42	1/4" X 48" X 42"	169	EA
1/2 BBS-42	1/2" X 48" X 42"	119	EA
1/4 FBBS-FW34 1/2	1/4" X 96" X 34 1/2"	375	EA
1/4 FBBS-FW42	1/4" X 96" X 42"	375	EA

Koch Midland

Modifications

CUSTOM DEPTH REDUCTION - BASE, VANITY, LINEN & PANTRY (ONLY)

REDUCE VANITY DEPTH FROM 21" TO 18"

REDUCE PANTRY DEPTH FROM 24" TO 21"
REDUCE LINEN DEPTH FROM 21" TO 18"

REDUCE BASE DEPTH FROM 24" TO 21"
REDUCE BASE DEPTH FROM 24" TO 18"

REDUCE BASE, VANITY & LINEN DEPTH	Price A	
CR-VU18	0.01	EA
CR-PU21	0.01	EA
CR-LU18	0.01	EA
CR-BU21	0.01	EA
CR-BU18	0.01	EA

CUSTOM WIDTH REDUCTION - WALL, BASE, OFFICE, VANITY & TALL CABINETS

1/2" INCREMENTS ONLY

BASE EASY REACH & WALL EASY REACH CABINETS CANNOT BE MODIFIED

REDUCE WIDTH	Price A	
CR-W	115	EA

ADA MODIFICATIONS

BASE & VANITY CABINET HEIGHT WILL BE 32 1/2" TALL

BASE, VANITY & TALL CABINET TOE KICK WILL BE 8 1/2" TALL X 6" DEEP

ADA MODIFICATIONS	Price A	
ADA HEIGHT	0.01	EA
ADA TOEKICK	0.01	EA

FACE FRAME AND DOOR

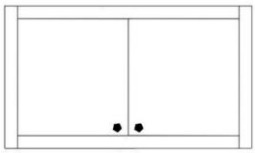

FACE FRAME AND DOORS ONLY - NO TOE KICK - WILL HAVE DADOES STILES AND RAILS

FACE FRAME AND DOOR	Price A	
FFD	70%	EA
70% OF CABINET LIST PRICE		

EXTENDED STILE

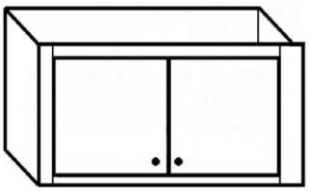

CABINET BOX WIDTH WILL STAY THE SAME - FACE FRAME WIDTH WILL INCREASE 3/4"

ATTACHED EXTENDED STILE	Price A	
AEXT.75L	87	EA
AEXT.75R	87	EA

UPGRADE TO 5/8" SOLID HARDWOOD DOVETAIL DRAWER BOX
WITH 7/8 EXTENSION UNDERMOUNT SOFT CLOSE TRACK

TRACK WEIGHT RATING 75 LBS

THIS STYLE OPTION APPLIES TO ALL DRAWERS	Price A	
HWDT-7/8	122	EA

UPGRADE TO BLUM 7/8 EXTENSION UNDERMOUNT SOFT CLOSE TRACK
(DOES NOT INCLUDE DOVETAIL)

THIS STYLE OPTION APPLIES TO ALL DRAWERS	Price A	
BLUMSC-7/8	78	EA

5 PC DRAWER FRONT UPGRADE
MINIMUM HEIGHT 5 1/2"
NOT AVAILABLE ON THE VB36SP

THIS STYLE OPTION APPLIES TO ALL DRAWERS	Price A	
5 PC DWR FRONT	55	EA

Koch Midland

Modifications

FALSE FRONT

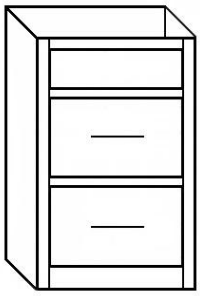

FALSE FRONT INSTEAD OF A WORKING DRAWER	Price	
	A	
FALSE FRONT	0.01	EA

WORKING DRAWER ON TUB VANITY

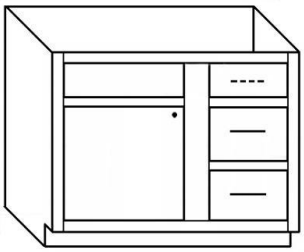

ONLY AVAILABLE ON 42" WIDE TUB DRAWERS
DOES NOT INCLUDE UPGRADES FOR DRAWER OR GUIDE

MOD FOR WORKING TOP DRAWER	PRICE	
	A	
WORKING DRAWER	111	EA

FINISHED WALL INTERIOR

NOT AVAILABLE OVER 48" WIDE AND DEEPER THAN 15"

FINISHED WALL INTERIOR PER CABINET	Price	
	A	
FIW21	480	EA
WALLS 21" TALL AND SHORTER		
NO SHELF		
FIW42	780	EA
WALLS 42" TALL AND SHORTER		
WITH SHELF/SHELVES		

DELETE DOORS

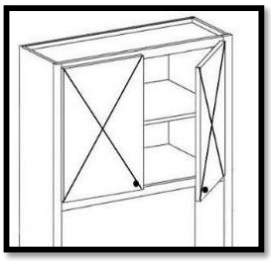

DELETE DOORS PER CABINET	Price	
	A	
DELETE DOORS	-38	PC

CABINET DOOR SENT LOOSE

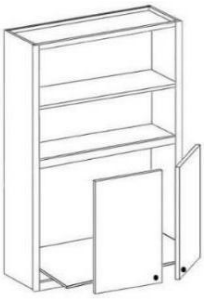

WILL NOT BORE FOR HINGES (NO ROUT) UNLESS SPECIFIED
HINGES ARE INCLUDED (SENT LOOSE)

CABINET DOORS LOOSE PER CABINET	Price	
	A	
CABDOOR LOOSE	0.01	EA

Modifications

FALSE BACK BEHIND TOP DRAWER SECTION ONLY, FOR COUNTERTOP OUTLET
OUTLET NOT INCLUDED

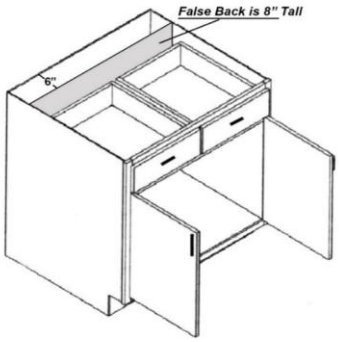

ONLY AVAILABLE ON 24" DEEP CABINETS. FALSE BACK IS SET AT 18", LEAVING A 6" SPACE BEHIND IT.
DRAWER WILL BE EQUIVALENT TO AN 18" DEEP CABINET.

FALSE BACK FOR BASE	Price	
	A	
FALSE BACK-TD	235	

LOOSE TOE KICK ON TALL CABINETS

LOOSE TOE KICK ONLY AVAILABLE ON TALL CABINETS
UNFINISHED

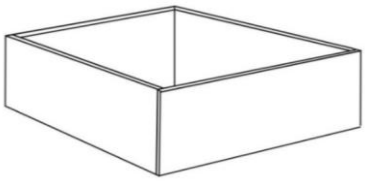

LOOSE TOE KICK FOR TALL CABINET	Price	
	A	
MTALL-LOOSE TOE	0	EA

ROSK WITH 3 1/2" TALL ROLLOUT - INSTALLED

SINGLE ROLLOUT INSTALLED
(SHOWN WITH 7/8 EXT UNDERMOUNT UPGRADE)

TWO ROLLOUTS INSTALLED

ONE ROLLOUT AT THE BOTTOM WILL NOT INCLUDE ADJUSTABLE HARDWARE.
TWO ROLLOUTS WILL INCLUDE ADJUSTABLE HARDWARE.

DRAWER BOX, ROLLOUTS AND TRACK WILL MATCH PER ORDER

TRACK WEIGHT RATING OF 75 LBS

ROLLOUT DRAWERS ARE 3 1/2" TALL

N/A IN CABINETS THAT ARE LESS THAN 15" DEEP

INSTALLED 3 1/2" ROLLOUT	Price	
	A	
ROSK-3 1/2	150	EA

Koch Midland

Accessories

MOLDINGS COME IN A 96" NOMINAL LENGTH. DUE TO THE NATURE OF WOOD THERE CAN BE UP TO 3" ON ONE, OR BOTH ENDS, THAT MAY REQUIRE TRIMMING. EACH PIECE WILL HAVE A MINIMUM OF 90" OF USABLE MOLDING
NOT AVAILABLE IN RUSTIC MAPLE

CAB CROWN

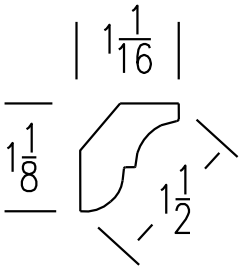

SHAKER CROWN

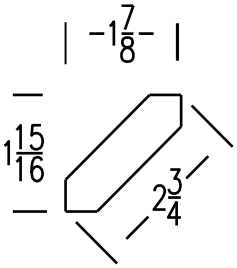

CROWN

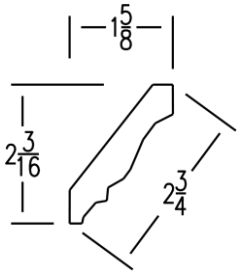

COVE CROWN

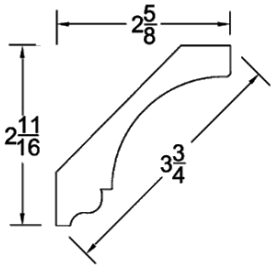

IMPERIAL CROWN

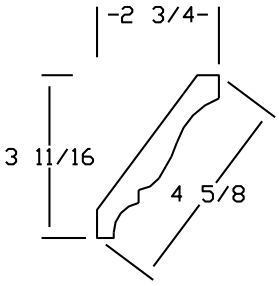

SCRIBE

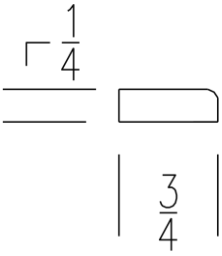

SHOE

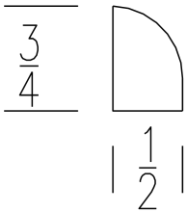

OUTCORN - SHAKER

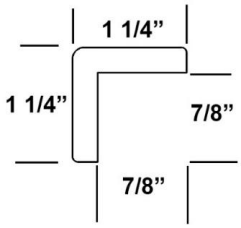

MOLDING		Price A	
CABCROWN		112	EA
SHKRCROWN		130	EA
CROWN		130	EA
COVECROWN		165	EA
IMPERIAL CROWN		165	EA
SCRIBE		55	EA
SHOE		65	EA
OUTCORNSHAKER		95	EA

Accessories

MOLDINGS COME IN A 96" NOMINAL LENGTH. DUE TO THE NATURE OF WOOD THERE CAN BE UP TO 3" ON ONE, OR BOTH ENDS, THAT MAY REQUIRE TRIMMING. EACH PIECE WILL HAVE A MINIMUM OF 90" OF USABLE MOLDING
NOT AVAILABLE IN RUSTIC MAPLE

OUTCORN 22

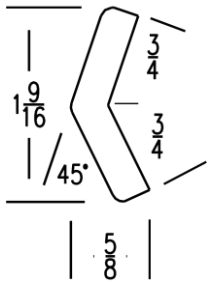

INCORN

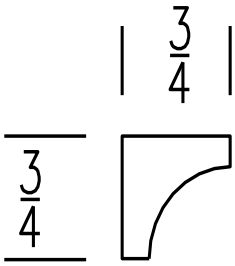

BATTEN

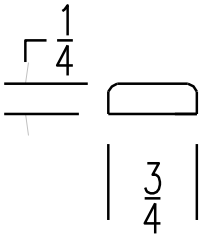

LIGHT RAIL - SHAKER

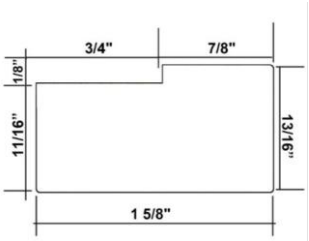

COUNTEREDGE

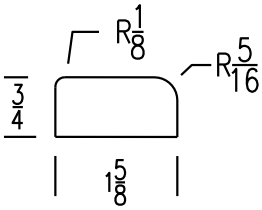

SMALL COVE CROWN

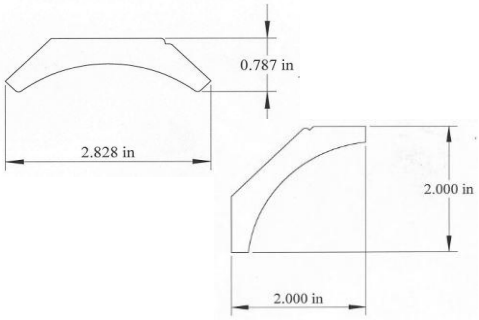

6138 FURNITURE BASE

4 1/2"

FINISHED TOE KICK

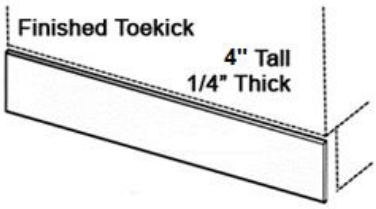

MOLDING		Price A	
OUTCORN 22		100	EA
INCORN		85	EA
BATTEN		55	EA
LIGHT RAIL-SHKR		135	EA
COUNTEREDGE		143	EA
SMCOVECROWN		112	EA
FURN6138		195	EA
FINTK4		27	EA

Accessories

MOLDINGS COME IN A 96" NOMINAL LENGTH. DUE TO THE NATURE OF WOOD THERE CAN BE UP TO 3" ON ONE, OR BOTH ENDS, THAT MAY REQUIRE TRIMMING. EACH PIECE WILL HAVE A MINIMUM OF 90" OF USABLE MOLDING
NOT AVAILABLE IN RUSTIC MAPLE

6138 FURNITURE BASE

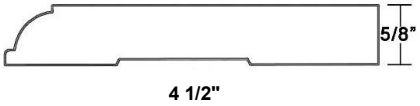

FINISHED TOEKICK

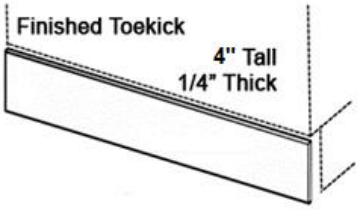

FINISHED ADA TOE KICK

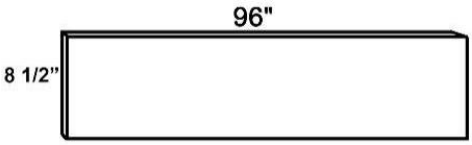

1/4" X 8 1/2" X 96" VC FINISHED TOE KICK
TOE KICK STAINED TO MATCH CABINETS

6" TALL CROWN RISER

PLEASE NOTE:
6" TALL CROWN RISER WILL HAVE SOFTENED EDGE ON ONE LONG SIDE
RANDOM LENGTH BETWEEN 85" AND 95" LONG
CANNOT SPECIFY LENGTH

MOLDING		Price	
		A	
FURN6138		195	EA
FINTK4.5		27	EA
FINTK-ADA		42	EA
MCR-6X85-95RL	5 7/8" X 85" to 95"	365	EA

Accessories

FLOATING SHELVES

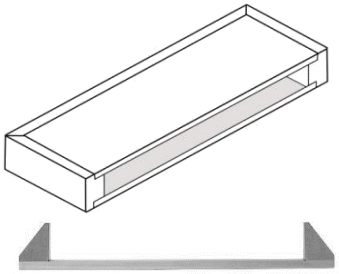

FINISHED ON FRONT AND BOTH ENDS - NO MODIFICATIONS
N/A IN RUSTIC MAPLE

KOCH AND COMPANY IS NOT RESPONSIBLE FOR ANY DAMAGES THAT OCCUR IF THE SHELF FALLS DOWN. WE CAN NOT CONTROL INSTALLATION, OR THE AMOUNT OF WEIGHT THAT IS PLACED ON THE SHELF, AND ARE NOT RESPONSIBLE FOR DETERMINING THE WEIGHT LOADING CAPACITY OF ANY SHELF.
DESIGNED TO BA A DECORATIVE SHELF, NOT FOR DISHES.

FLOATING SHELF		Price	
		A	
FS-24	24" X 10" X 2 1/4"	319	EA
FS-30	30" X 10" X 2 1/4"	410	EA
FS-36	36" X 10" X 2 1/4"	502	EA
FS-48	48" X 10" X 2 1/4"	636	EA

LOOSE ROLLOUT

ONLY AVAILABLE 24" DEEP & N/A OVER 39" WIDE

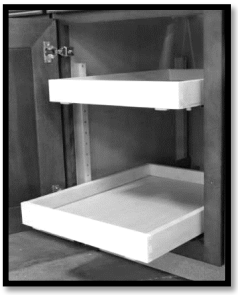

WILL BE LOOSE - MUST BE INSTALLED ON SITE
INCLUDES DRAWER SLIDE SPACERS AND GUIDES
DOES NOT INCLUDE POSTS
TRACK WEIGHT RATING OF 75 LBS
1/2" RABBETED SOLID WOOD DRAWER BOX
ROLLOUT DRAWERS 3 1/2" TALL
DRAWER BOX, ROLLOUTS AND TRACK WILL MATCH PER ORDER
DRAWER BOX/TRACK SELECTION UPCHARGES WILL APPLY

LOOSE ROLLOUT		Price	
		A	
ROSK-3 1/2-LOOSE	24" DEEP	100	EA
N/A OVER 39" WIDE			

POSTS FOR ROSK

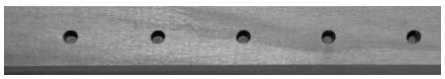

ROSK-BASEPOST WILL BE 17" LONG
ROSK-TALLPOST WILL BE 55" LONG

POSTS FOR ROSK		Price	
		A	
ROSK-BASEPOST		78	EA
INCLUDES 4 BASE ROLLOUT POSTS W/ PEG HOLES & 8 SCREWS			
ROSK-TALLPOST		215	EA
INCLUDES 4 TALL ROLLOUT POSTS W/ PEG HOLES & 16 SCREWS			

STD 3/4 EXTENSION SIDEMOUNT TRACK

STD 3/4 EXT SIDEMOUNT TRACK		Price	
		A	
LT-GSM3/4EXT21	21" DEEP	43	PR
LT-GSM3/4EXT24	24" DEEP	43	PR

BLUM 7/8 EXTENSION UNDERMOUNT SOFT CLOSE TRACK

BLUM 7/8 EXT SC TRACK		Price	
		A	
554H4570B	21" DEEP	78	PR
554H5330B	24" DEEP	78	PR

Koch Midland

Accessories

LOOSE 1/2" STANDARD DRAWER BOX

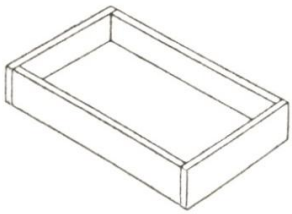

LOOSE STANDARD DRAWER BOX		Price A	
STDBOXGSM-3 1/2		79	EA
STDBOXGSM-7 1/2		79	EA
INCLUDES 3/4 EXT SIDEMOUNT GUIDES			
STDBOX7/8-3 1/2		288	EA
STDBOX7/8-7 1/2		288	EA
INCLUDES 7/8 UNDERMOUNT GUIDES			

LOOSE 5/8" SOLID HARDWOOD DOVETAIL DRAWER BOX

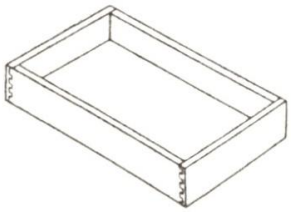

LOOSE DOVETAIL DRAWER		Price A	
HWDTBOX-3 1/2		298	EA
HWDTBOX-7 1/2		298	EA
INCLUDES 7/8 UNDERMOUNT GUIDES			

CORBEL

CORBEL		Price A	
HR-CORG-3	3"W X 6 1/2"D X 10"T	445	EA

SUPPORTS

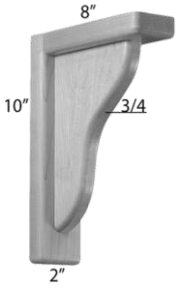

SUPPORTS		Price A	
SUPPORTS		180	EA

POSTS

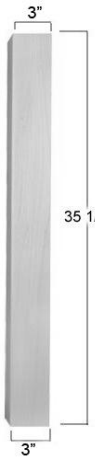

A0927-35-30

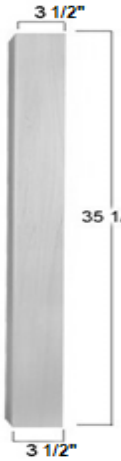

A0927-35-35

POSTS		Price A	
A0927-35-30		347	EA
A0927-35-35		500	EA

Koch Midland

Accessories

CABINET MATERIAL

CABINET MATERIAL

1/4" HAS MAPLE PRINT ON ONE SIDE AND UNFINISHED ON ONE SIDE
1/2" HAS MATCHING PRINT ON ONE SIDE AND MAPLE PRINT ON ONE SIDE
N/A IN EVERGREEN FOG, GRAPHITE, NAVAL OR SLATE BLUE.

CAB MATERIAL		Price A	
CAB MATERIAL-1/4	1/4" X 48" X 96"	151	EA
CAB MATERIAL-1/2	1/2" X 48" X 109"	214	EA

FACE FRAME MATERIAL

DADOED FACE FRAME MATERIAL

FACE FRAME MATERIAL		Price A	
FFMATERIAL-1 1/2	3/4" X 1 1/2" X 96"	205	EA

FILLERS

F-3X30

F-6X30

FILLERS ARE FINISHED ON FACE AND BOTH LONG EDGES

FILLERS		Price A	
F-3X30	3/4" X 3" X 30"	60	EA
F-3X42	3/4" X 3" X 42"	76	EA
F-3X96	3/4" X 3" X 96"	245	EA
F-6X30	3/4" X 6" X 30"	99	EA
F-6X42	3/4" X 6" X 42"	114	EA
F-6X96	3/4" X 6" X 96"	316	EA

STRAIGHT VALANCE

STRAIGHT VALANCE		Price A	
STVAL36	6" X 36"	141	EA
STVAL42	6" X 42"	166	EA
STVAL48	6" X 48"	192	EA

LOOSE SHELF

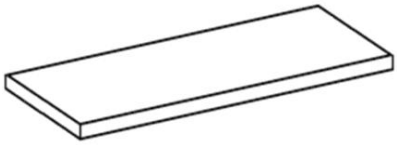

WILL BE EDGEBANDED ON FRONT SIDE & HAVE MAPLE PRINT ON TWO SIDES
ONLY STANDARD SIZES FOR MIDLAND ARE AVAILABLE

LOOSE SHELF		Price A	
LOOSE SHELF-12	3/4" X 10 1/2" DEEP	17	LF
LOOSE SHELF-15	3/4" X 13 1/2" DEEP	24	LF
LOOSE SHELF-21	3/4" X 19 1/2" DEEP	31	LF
LOOSE SHELF-24	3/4" X 22 1/2" DEEP	35	LF

3/4" FINISHED SHELVING

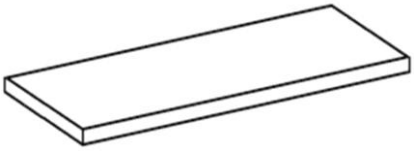

FIN SHELVING		41	SF

WILL BE EDGEBANDED ON FRONT SIDE & THE TOP AND BOTTOM OF THE SHELF WILL BE FINISHED.

Koch Midland

Accessories

LOOSE DOOR

FOR SINGLE DOOR - NO RE-FACE JOBS WILL BE ACCEPTED. HINGES NOT INCLUDED IN PRICING SEE BELOW FOR HINGE OPTIONS
PRICING IS PER SQUARE FOOT.
MINIMUM ORDER 2 SF

N/A OVER 46" TALL OR OVER 25" WIDE

LOOSE DOOR	43	SF
LOOSE DOOR NR	42	SF
NO ROUT ON DOOR		

LOOSE DRAWER FRONT

CUSTOM SIZES NOT AVAILABLE ON DOORS OR DRAWER FRONTS ONLY STANDARD SIZES THAT ARE AVAILABLE IN MIDLAND CAN BE ORDERED.

ANY CUSTOM WIDTH REDUCTION UNDER 9" WILL BE A SLAB DOOR.

ADDITIONAL UPCHARGES FOR FINISH AND WOOD SPECIES WILL APPLY FOR LOOSE DOORS AND DRAWERS FRONTS. PRICE IS BY THE SQUARE FOOT.

LDF-SLAB	36	SF
LDF-5PC	43	SF

LOOSE HINGES

STANDARD HINGE

SOFT CLOSE HINGE

LOOSE STANDARD HINGE		Price	
		A	
LH-SH1/2	1/2" OVERLAY	9	EA
Used on STD overlay			
LH-SH3/4	3/4" OVERLAY	9	EA
Used on corner cabinet			
LH-SH11/4	1 1/4" OVERLAY	9	EA
Used on full overlay			

LOOSE BLUMOTION HINGE		Price	
		A	
LH-BM1/2	1/2" OVERLAY	11	EA
Used on STD overlay			
LH-BM3/4	3/4" OVERLAY	11	EA
Used on corner cabinet			
LH-BM11/4	1 1/4" OVERLAY	11	EA
Used on full overlay			

HINGE RESTRICTOR

Restricts the opening angle of the compact blue motion hinge from a 110 degree angle to a 86 degree angle

ONLY AVAILABLE FOR BLUMOTION HINGE

NOT AVAILABLE INSTALLED - WILL BE SENT LOOSE
WILL NOT WORK ON CABINETS WITH ROLLOUTS

HINGE RESTRICTOR FOR BLUMOTION HINGE	Price	
	A	
HINGE RESTRICTOR	9	EA

Accessories

BER HINGES 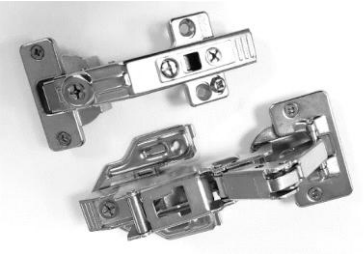	**BER HINGES**		80	EA
	SET OF BASE EASY REACH HINGES			
BLUM 7/8 RELEASE CLIP **(FOR 5/8" SOLID HARDWOOD DOVETAIL DRAWER BOX)** INSTALL UNDER DRAWER BOX 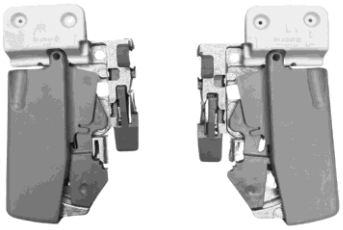	**7/8RELEASECLIP-R**		3	EA
	7/8RELEASECLIP-L		3	EA
	ONE RIGHT AND ONE LEFT REQUIRED PER DRAWER			
BLUM 7/8 RELEASE CLIP **(FOR 1/2" RABBETED PLYWOOD DRAWER BOX)** INSTALL UNDER DRAWER BOX 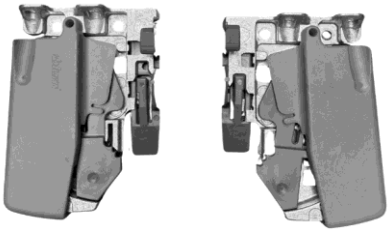	**7/8RLSCLIP-PLY-R**		3	EA
	7/8RLSCLIP-PLY-L		3	EA
	ONE RIGHT AND ONE LEFT REQUIRED PER DRAWER			
HINGE SHIM USED ON HINGES TO PULL DOORS TOGETHER 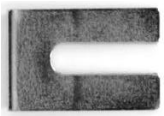	**HINGESHIM**		3	EA
SHELF CLIP	**MID SHELF CLIP**	5 MM - PER 25	10	EA
HINGE SCREW	**HINGESCREWS**	PKG OF 10	11	EA
BUMPER 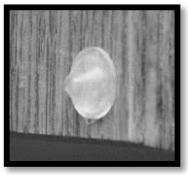	**BUMPERS**	PER 25	10	EA

Accessories

METAL TRAY DIVIDER

LD-597-18CR TRAY DIVIDER

BASE ACCESSORIES		Price	
LD-597-18CR	20" X 18"	125	EA

TILT OUT TRAY

6572 TILT OUT TRAY KIT INCLUDES TWO TRAYS

6572-11-TOTK	11" X 2 1/8" X 3 3/16"	186	EA
6572-14-TOTK	14" X 2 1/8" X 3 3/16"	186	EA

CUTLERY TRAY - SINGLE TRAY

WHITE FINISH

CUTLERY TRAY	Price	
FOR A B15		
CT-1W-52	70	EA
11 1/2"W - 21 1/4"D - 2 3/8"T		
FOR A B18		
CT-2W-52	75	EA
14 1/2"W - 21 1/4"D - 2 3/8"T		
FOR A B21		
CT-3W-52	80	EA
17 1/2W" - 21 1/4"D - 2 3/8"T		
FOR A B24		
CT-4W-52	85	EA
21 7/8W" - 21 1/4"D - 2 3/8"T		

Koch Midland

Accessories

PAINT

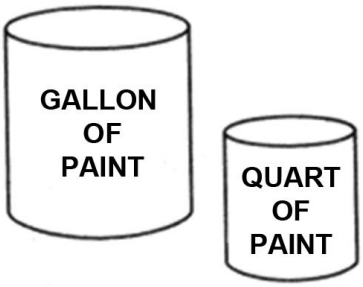

ARCTICPAINTGL		564	EA
ARCTICPAINTQT		141	EA
ARCTICPAINTPT		69	EA
DUSKPAINTGL		564	EA
DUSKPAINTQT		141	EA
DUSKPAINTPT		69	EA
EVERGREENFOGGL		564	EA
EVERGREENFOGQT		141	EA
EVERGREENFOGPT		69	EA
GRAPHITEPAINTGL		564	EA
GRAPHITEPAINTQT		141	EA
GRAPHITEPAINTPT		69	EA
NAVALPAINTGL		564	EA
NAVALPAINTQT		141	EA
NAVALPAINTPT		69	EA
OYSTERPAINTGL		564	EA
OYSTERPAINTQT		141	EA
OYSTERPAINTPT		69	EA
SHOJIWHITEGL		564	EA
SHOJIWHITEQT		141	EA
SHOJIWHITEPT		69	EA
SLATEBLUEPAINTGL		564	EA
SLATEBLUEPAINTQT		141	EA
SLATEBLUEPAINTPT		69	EA
TAUPEPAINTGL		564	EA
TAUPEPAINTQT		141	EA
TAUPEPAINTPT		69	EA

SPRAY PAINT

ARCTICPAINTCAN		93	EA
DUSKPAINTCAN		93	EA
EVERGREENFOGCAN		93	EA
GRAPHITEPAINTCAN		93	EA
NAVALPAINTCAN		93	EA
OYSTERPAINTCAN		93	EA
SHOJIPAINTCAN		93	EA
SLATEBLUEPAINTCAN		93	EA
TAUPEPAINTCAN		93	EA

STAIN

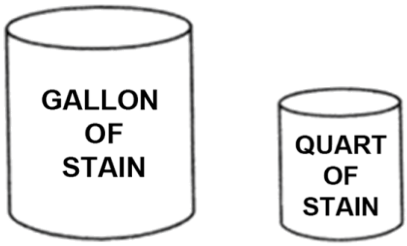

**SPRAY EQUIPMENT IS NEEDED FOR THIS APPLICATION.
THIS CAN NOT BE HAND WIPED OR APPLIED WITH
A PAINT BRUSH.**

CASHEWSTAINGL		352	EA
CASHEWSTAINQT		93	EA
CASHEWSTAINPT		55	EA
ESPRESSOSTAINGL		352	EA
ESPRESSOSTAINQT		93	EA
ESPRESSOSTAINPT		55	EA
NUTMEGSTAINGL		352	EA
NUTMEGSTAINQT		93	EA
NUTMEGSTAINPT		55	EA
SADDLESTAINGL		352	EA
SADDLESTAINQT		93	EA
SADDLESTAINPT		55	EA
PEBBLESTAINGL		352	EA
PEBBLESTAINQT		93	EA
PEBBLESTAINPT		55	EA

Accessories

TOP COAT

TOPCOATGL		282	EA
TOPCOATQT		75	EA

TOUCH UP KITS

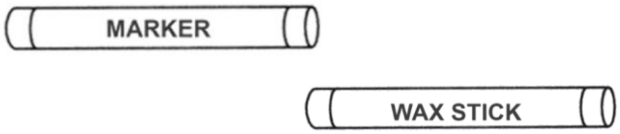

TUK-PAINT	TOUCH UP KIT	72	EA
TUK-STAIN	TOUCH UP KIT	72	EA

SAMPLE BASE - 18" DEEP

DRAWER WILL HAVE 7/8 EXTENSION UNDERMOUNT SOFT CLOSE TRACK.
BASE WILL A 3/4 EXTENSION SIDE MOUNT ROLLOUT.

SAMPLES		Price	
		A	
ASHLAND SAMPLE BASE (PAINT ONLY)			
MSBASE-MAPLE-A	13" X 27 1/4"	418	EA
HIGHLAND SAMPLE BASE (PAINT ONLY)			
MSBASE-MAPLE-H	13" X 27 1/4"	418	EA
LIBERTY SAMPLE BASE (STAIN ONLY)			
MSBASE-MAPLE-L	13" X 27 1/4"	418	EA
NOVA SAMPLE BASE (PAINT ONLY)			
MSBASE-MAPLE-N	13" X 27 1/4"	418	EA
PIONEER SAMPLE BASE			
MSBASE-MAPLE-P	13" X 27 1/4"	418	EA
STOCKTON SAMPLE BASE			
MSBASE-MAPLE-S	13" X 27 1/4"	418	EA
TIPTON SAMPLE BASE (PAINT ONLY)			
MSBASE-MAPLE-T	13" X 27 1/4"	418	EA

FACE FRAME, DOOR AND DRAWER FRONT - 13" X 22 3/4"

SAMPLES		Price	
		A	
MFDD-STAIN	13" X 22 3/4"	110	EA
MFDD-PAINT	13" X 22 3/4"	110	EA

DOOR AND DRAWER FRONT COMBO - 13" X 22 3/4"

SAMPLES		Price	
		A	
MDDFC-STAIN	13" X 22 3/4"	85	EA
MDDFC-PAINT	13" X 22 3/4"	85	EA

Accessories

SAMPLE DOOR

MSAMPLE DOOR-A

MSAMPLE DOOR-H

MSAMPLE DOOR-L

MSAMPLE DOOR-N

MSAMPLE DOOR-P

MSAMPLE DOOR-S

MSAMPLE DOOR-T

ASHLAND SAMPLE DOOR			
MSAMPLE DOOR-A	12 1/2" X 15 1/2"	60	EA
HIGHLAND SAMPLE DOOR			
MSAMPLE DOOR-H	12 1/2" X 15 1/2"	60	EA
LIBERTY SAMPLE DOOR			
MSAMPLE DOOR-L	12 1/2" X 15 1/2"	60	EA
NOVA SAMPLE DOOR			
MSAMPLE DOOR-N	12 1/2" X 15 1/2"	60	EA
PIONEER SAMPLE DOOR			
MSAMPLE DOOR-P	12 1/2" X 15 1/2"	60	EA
STOCKTON SAMPLE DOOR			
MSAMPLE DOOR-S	12 1/2" X 15 1/2"	60	EA
TIPTON SAMPLE DOOR			
MSAMPLE DOOR-T	12 1/2" X 15 1/2"	60	EA
MIDLAND STARTER DOOR KIT			
MSDK		350	SET
Includes one of each:			
Ashland, Paint Grade-HD, Dusk			
Highland, Paint Grade-HD, Shoji White			
Nova, Paint Grade-HD, Slate Blue			
Pioneer, Paint Grade-HD, Oyster			
Pioneer, Maple, Saddle			
Pioneer, Rustic Maple, Cashew			
Liberty, Maple, Pebble			
Stockton, Maple, Cashew			
Tipton, Paint Grade-HD, Arctic			

INDIVIDUAL SAMPLE BLOCK

SAMPLE BLOCK SET - SET OF 16

N/A IN RUSTIC MAPLE

SAMPLES			
MSBS	BLOCK SET	70	SET
INCLUDES DRAWER BOX			
MISB	IND BLOCK	4	EA

MOLDING CHAIN - SET OF 15 PIECES

MSMC	MOLDING CHAIN	27	SET

MEDIA

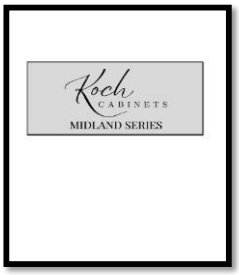

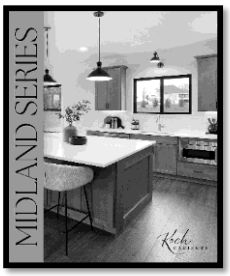

MEDIA			
MIDPRICEBOOK	PRICE BOOK	40	EA
MIDBROCHURE	SET OF 25	115	SET
MIDHANDOUT	SET OF 25	102	SET

Accessories

WALL UNIT

WALL UNIT IS 27" WIDE, 32 1/2" TALL AND 12" DEEP

SHAKER CROWN WILL BE APPLIED

NOTE THE PAINT OR STAIN AND DOOR STYLE ON THE ORDER

BASE UNIT

BASE UNIT IS 27" WIDE, 34 1/2" TALL AND 18" DEEP

DRAWER WILL HAVE BLUM 7/8 SOFT CLOSE UNDERMOUNT GUIDE

THE BASE WILL HAVE TWO BUTT DOORS AND INCLUDES THE STAR DUNE DESIGN FORMICA TOP

NOTE THE PAINT OR STAIN AND DOOR STYLE ON THE ORDER

DOOR RACK

DOOR RACK UNIT WILL BE 28 1/2" WIDE AND 27" TALL

DOOR RACK WILL HAVE SHAKER CROWN

WILL HOLD UP TO 14 DOORS (DOORS NOT INCLUDED)

MIDLAND SIGNAGE

UNIT WILL BE 5 1/2" X 24"

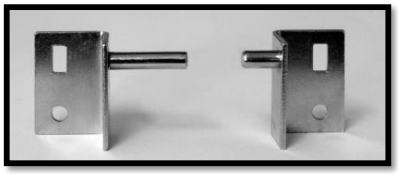

SAMPLES		Price A	
WALL DISPLAY CENTER			
INCLUDES WALL AND BASE UNIT			
W-DISPLAY-PAINT		1512	EA
W-DISPLAY-STAIN		1512	EA
RACK DISPLAY CENTER			
INCLUDES DOOR RACK AND BASE UNIT			
R-DISPLAY-PAINT		1277	EA
R-DISPLAY-STAIN		1277	EA
DOOR RACK			
DOOR RACK-PAINT		502	EA
DOOR RACK-STAIN		502	EA
SIGNAGE			
SIGNAGE-PAINT		95	EA
SIGNAGE-STAIN		95	EA
DOORBRACKET-HL		9	SET
L HINGE - DOORS WILL SWING LEFT			
DOORBRACKET-HR		9	SET
R HINGE - DOORS WILL SWING RIGHT			

NOTES OR ADDITIONS